Super Trouper IV Owner's Manual

March 2024

Version 1.00

Strong Lighting
10533 Chandler Road, Suite 101
LaVista, NE 68128

Document Revisions

Date	Version Number	Document Changes
10/5/2023	0.01	Initial Draft
3/8/2024	1.00	First Release

Table of Contents

1 Introduction

THE STRONG SUPER TROUPER® IV consists of a direct current xenon lamphouse and an advanced-design lens mechanism constructed and aligned on a common base rail. Operator controls are easily accessible. The follow spot head includes a six-color, self-canceling color changer and mounts to a collapsible base stand and yoke assembly. A switching-type, solid-state xenon power supply with a keyed quick-disconnect lamphouse cable receptacle completes the follow spot system.

Only power supplies manufactured by Strong Lighting can be used with the xenon follow spot. Current level adjustments (DC output to the xenon bulb) are made at the power supply using an output potentiometer located inside the power supply. For detailed information regarding the installation and operation of the xenon power supply, see the instruction manual furnished separately.

The Super Trouper IV utilizes a deep ellipse dichroic metal reflector designed to operate in a fixed position with a horizontally mounted xenon lamp as the light source. A solid-state DC Pulse Igniter is included that requires no AC control circuit. A coated glass heat filter is supplied to reduce the radiant heat at the optical system and color changer.

The rear panel is equipped with a DC ammeter and running time meter. The ammeter continuously displays the operating DC current, while the hour meter records the xenon lamp's operating hours. The lamp is ignited and extinguished using the LAMP rocker switch mounted on the instrument panel.

Only Xenon lamps designed for horizontal operation should be used in this follow spot. The presently approved ratings for bulbs used in this follow spot are 2000-, 2500-, 3000- and 4000-watt, type “HS.” See the listing in this manual for the approved types and necessary adapters.

Controls for positioning the Xenon lamp inside the elliptical reflector are above the instrument panel at the rear of the follow spot. The adjustments control the lamp's horizontal, vertical, and focal positions.

Cooling blowers and a fan are internally wired in the follow spot, operate on 208-240 VAC, and are required to keep the seals on the lamp at a safe operating temperature. This system will operate continuously until power is turned off at the main line switch to the xenon power supply. The Super Trouper IV requires no external exhaust system when using a factory-approved, ozone-free xenon lamp.

An arc stabilization magnet, as required by the lamp manufacturers for the operation of all sizes of lamps, is mounted to the base of the follow spot below the reflector. The SOUTH pole of this permanent magnet is dabbed with paint and must be pointed toward the left (non-operator) side of the follow spot.
The Super Trouper IV has an 11-foot cable assembly containing the two DC leads, the ground wire, and all AC control leads. The cable assembly is terminated into a multiple pin, keyed MS connectors, which mate to a receptacle on the xenon power. The power supply manual details the AC hook-up to the xenon power supply.

The optical system of the Super Trouper IV incorporates a newly designed lens mechanism. Follow spot operators familiar with earlier types of Strong spotlights are urged to study the section of this manual entitled OPERATION OF THE OPTICAL SYSTEM and practice the Super Trouper IV operation before their first performance. The spot size control ("trombone") handle is drawn *back* to "spot" and pushed *forward* to "flood." The spot edge is focused by rotating the focus knob located behind the spot size control ("trombone") and uniquely travels with the lens mechanism.

Fade-out ("dimmer"), Chopper, and Iris controls are positioned in the same configuration as earlier Strong spotlights. All optical system controls, except spot size and focus, are accessible for right—or left-hand operation. The color changer can be easily reversed to position the color arms on either side. Operation of the self-canceling color changer remains unchanged, and standard Strong nine-inch gel frames are used.

When transporting the follow spot, it is recommended, but not necessary, that the xenon lamp be removed and placed in its original shipping carton with the cover on the lamp to ensure against breakage. After cooling to room temperature, the lamp may remain mounted in the lamphouse if moving the follow spot from one position to another within the arena or auditorium. Reasonable care should be exercised; the xenon lamp warranty does not cover breakage caused by handling.

Transportation of the Super Trouper IV from venue to venue with the lamp installed is permitted so long as the road case in which the follow spot is stored is designed to protect the fixture and provide a cushioned ride. Additional safety during transit can be secured by securing the front of the lamp to the front lamp holder with a tie wrap or a short tie line. BE SURE TO REMOVE THIS DEVICE BEFORE USING THE FOLLOW SPOT.

CAUTION: Refer all servicing of this unit to an authorized Strong Lighting equipment dealer. Switching-type Xenon power supplies employ solid-state circuitry requiring sophisticated diagnostic equipment not generally available to field service personnel. Hazardous high voltages exist within the power supply cabinet.

DANGER: Be sure to read this manual in its entirety before attempting to install, operate, or maintain the Super Trouper IV

2 Follow Spot Features

1. Cover Lamp Compartment	9. Mounting Bracket for Leveling Foot
2. Fade-Out Control Lever	10. Bolt for Folding Leg
3. Chopper Blade Control Lever	11. Pan Friction Adjust
4. Iris Control Lever	12. Tilt Friction Adjust
5. Cover Optical System (two-piece)	13. Spot Size Control (Trombone)
6. Color Changer	14. Lifting Strap
7. Color Selector Lever	15. Handles (four)
8. Height Adjusting Pin	16. Spot Edge Control (Focus)

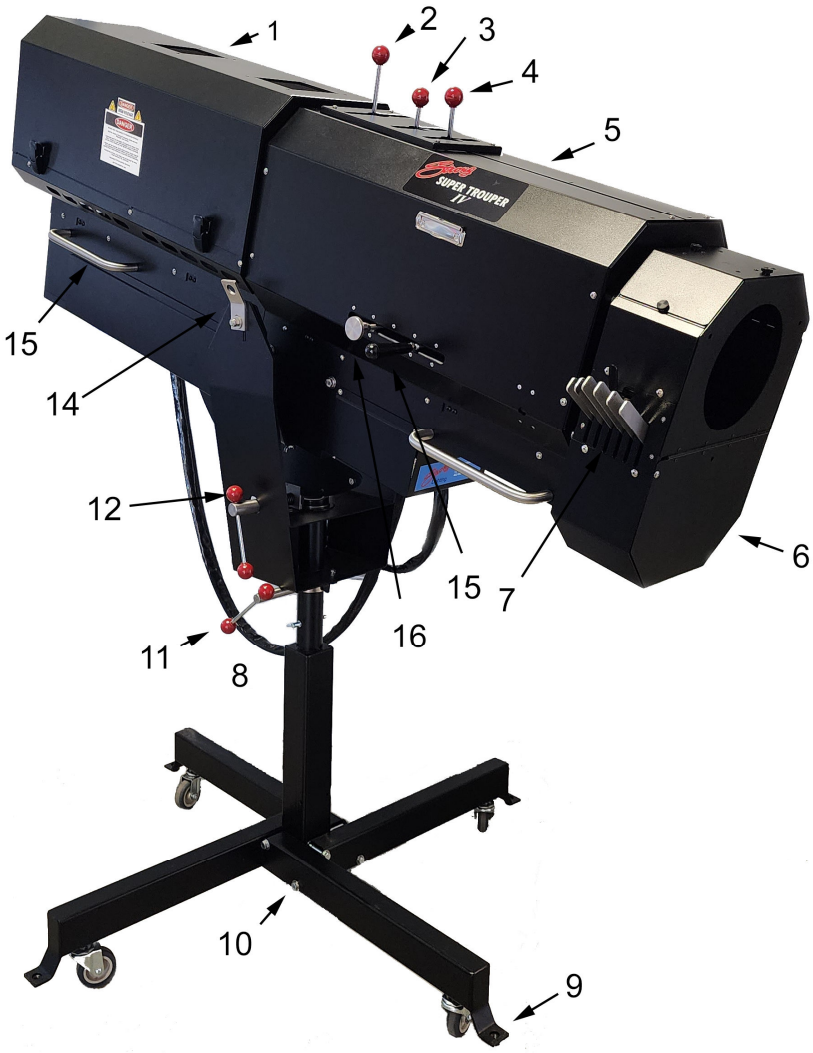

3 Installation

CAUTION: This equipment operates at hazardous voltages and should only be operated by qualified, trained personnel. Do not remove any cover panels when the unit is energized.

The Super Trouper IV is shipped in sections that must be assembled. Lifting straps mounted to the yoke pivot studs (see page 7, Item 14) are designed to bear the follow spot's weight and base. This permits assembling the follow spot on the floor and later hoisting it to an overhead position.

The folding base assembly is shipped collapsed and requires only folding the base legs down and fixing the legs using the four bolts (page 7, Item 10) supplied. Screw the four leveling feet and locknuts (page 7, Item 9) into the brackets at the end of each leg.

When installed permanently, the leveling feet and casters must be removed, and the holes in the base leg brackets are used for hardware (user-supplied lag screws or bolts) to secure the base to the floor or platform. If it is desired to have the unit portable, the four leveling feet must be adjusted until the entire weight of the follow spot has been shifted from the casters to the leveling feet.

The inner tube below the support yoke is drilled with three holes to permit adjusting the height of the follow spot. The three holes are on four-inch centers and will allow an optical height of approximately 57-1/2 inches, 61-1/2 inches, and 65-1/2 inches above floor level (An optional “low-boy” stand is available – consult the factory for details) to the optical center of the lamphouse and lens system. Insert the height location pin through the hole in the outer tube of the base column and one of the holes in the inner tube. The leveling feet may be adjusted through an additional two-inch range.

The horizontal pan and vertical tilt locking knobs are on the yoke assembly's right-hand (viewed from the rear) side. The yoke saddle is marked to indicate FRONT. Tighten both locking devices securely before placing the follow spot on the support yoke.

Place the follow spot on to the yoke assembly, with the operator’s side of the system (the side with the zoom controls) to the *right* side of the yoke saddle, the same as the yoke locking controls. Line up the four mounting holes in the bottom plate of the support brace with the four slotted holes in the saddle of the yoke assembly. Secure

using the four 5-16/18 wing head screws and flat washers. After mounting the color changer (see below), loosen the tilt lock and test the follow spot balance at the desired projection angle. Loosen the (4) wing head screws and slide the follow spot head forward and back in the slotted holes in the yoke saddle to achieve optimum balance before finally securing the wing head screws.

Mount the color changer to the front of the follow spot with the color arms facing the desired operating side. Remove the (3) screws from the mounting studs on the front of the housing. Align the three holes in the color changer housing to the three mounting studs; open the hinged front cover to access the mounting holes and secure the boomerang to the studs using the (3) screws.

Attach the follow spot cable to the mating receptacles on the power supply. The power supply connectors are keyed for correct pin alignment; ensure pins are seated before tightening the locking ring. DO NOT energize the xenon power supply before the xenon lamp is correctly installed into the lamphouse.

The Super Trouper IV is wired for operation with the “compact” model xenon power supply 6200xxx, and the new B3, B4, and B5 Strong Lighting follow spot power supplies. If installing the Super Trouper IV with an older model or type xenon power supply, a ground wire must be connected to the power supply’s MS connector Pin M. Consult the factory for details.

4 Lamp Installation

DANGER: Because of the high internal pressure of the xenon gas, handling a xenon lamp may expose the operator or technician to hazards resulting from bursting the quartz envelope.

Bursting may occur if the lamp is dropped or mishandled. The hazard is substantially increased if the lamp is hot from operation, as the gas pressure increases in a manner directly proportional to the increased temperature. Whenever the xenon lamp is removed from its protective cover, and until the installation or removal is complete and the lamphouse assembly is secured, the operator or technician MUST wear protective clothing, including Kevlar™ gloves, acetate face shield, and protective jacket or equivalent. (These items are available from Strong Lighting.) Instructions regarding protective clothing are subject to change by any local or federal agency that may have authority over such matters, dependent on the area or point of use of the Strong Lighting equipment.

It should be noted that xenon lamps do not “explode” in the usual sense, in that no explosive energy-releasing reaction occurs. They merely “burst” like a balloon or a pressure vessel. The hazard is related to the flying particles of glass-like quartz, propelled with sufficient force to penetrate street clothing, eyes, and skin. It cannot be over-emphasized that protective clothing, gloves, and eye protection be worn when handling xenon lamps.

Refer all lamp replacement and service to QUALIFIED PERSONNEL with adequate protective clothing (face shield, Kevlar™ gloves, protective jacket/vest). For routine lamphouse service, observe the following rules:

1. Allow the lamp to cool to room temperature before opening the lamphouse. Put on the protective clothing described above.
2. De-energize the xenon power supply at the AC source before opening the lamphouse compartment.

3. If possible, encase the lamp in its protective cover when cleaning or servicing the lamphouse interior. The lamp must also be encased in the cover when outside the lamphouse.
4. Clean the lamp after it has cooled to room temperature. Do not touch the quartz envelope of the lamp; fingerprints will burn in and create hot spots, which may shorten bulb life. If fingermarks are made, they should be carefully removed with isopropyl alcohol and cotton before operation.
5. Never view an ignited lamp directly. BLINDNESS OR PERMANENT EYE DAMAGE MAY BE INCURRED.
6. Use only xenon lamps designated as OZONE FREE.
7. Maintain the lamphouse blowers in good operating condition. Keep the blower inlets clean for unrestricted airflow.
8. After extinguishing the lamp, operate the lamphouse blowers for at least ten minutes to ensure maximum lamp life.
9. If returning a lamp for warranty adjustment, pack it in its original shipping container. Complete and return all required warranty information.
10. Dispose of expired lamps beyond warranty in the following manner: Wrap the lamp tightly in several layers of canvas or heavy cloth. Place it on a hard surface and shatter the envelope with a sharp hammer blow. DO NOT place an un-shattered lamp in an ordinary refuse container.
11. DO NOT PERMIT UNAUTHORIZED PERSONNEL TO PERFORM OR ATTEMPT ANY PHASE OF XENON LAMP HANDLING OR SERVICE.

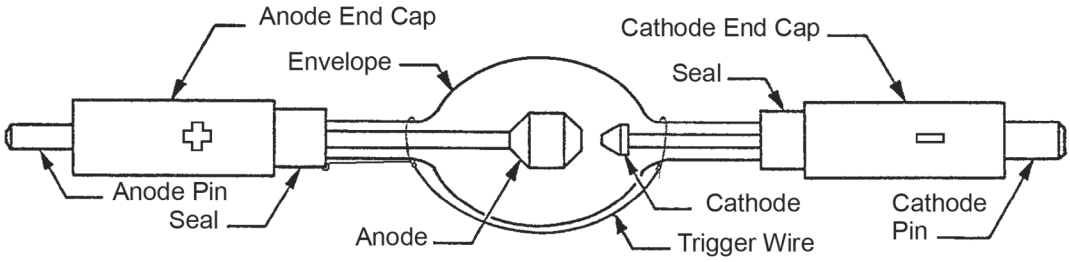

4.1 Lamp Installation Procedure

1. Place the follow spot in the horizontal position.
2. Open the lamphouse cover with the two black plastic latches. Rotate the cover back until it stops. Then, remove the two inner lamphouse covers.
3. The Super Trouper IV is shipped from the factory with a compatible xenon power supply and rear support collet appropriate for the lamp power ordered. Note that the 2000, 2500, and 3000-watt rear support collet differs from the 4500-watt collet.
4. The Super Trouper IV is compatible with the following lamps. Each of the lamps listed is ozone-free. Other manufacturers not listed may offer interchangeable lamps. Check with the lamp manufacturer for compatibility.

Watts	ASL	LTI	Osram	Nom. Amps	Max. Amps
2000	XM2000HS/G	LTIX-2000W-HS	XBO2000W/HS -OFR	75	85
2500	XM2500HS/R	LTIX-25000W-HS	XBO2500W/HS-OFR	85	95
3000	XM3000HS/R	LTIX-3000W-HS	XBO3000W/HS-OFR	95	105
4000	XM4500HS/G	LTIX-45000W-HS	XBO4500W/HS-OFR	125	135

Note: Osram “XL” lamps are acceptable

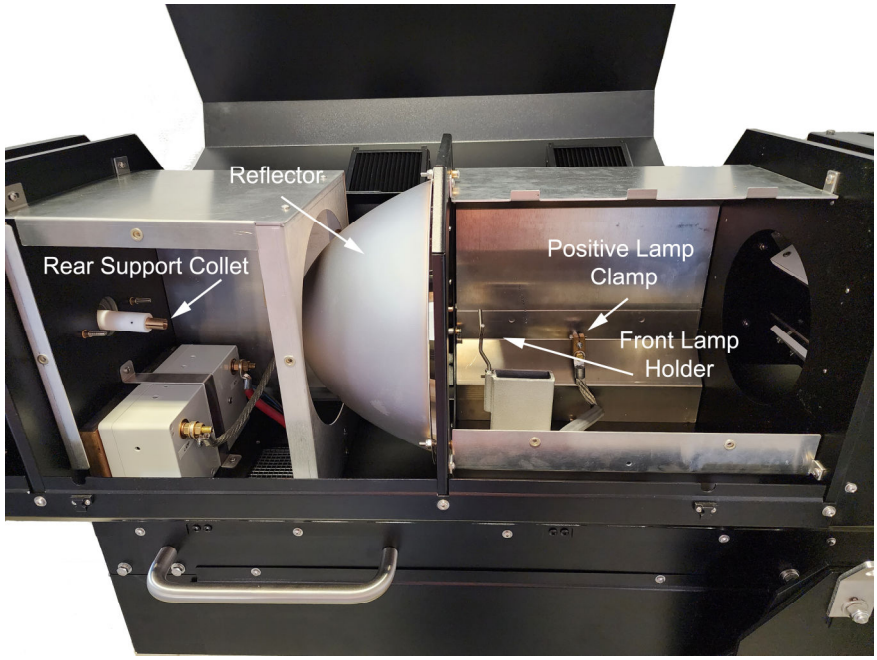

5. Prepare your lamp for installation. If your lamp was supplied with an attached lead, remove that lead. All lamps should have an attached trigger wire (see diagram above). Begin your installation by removing the protective cover if necessary.
6. Slide the contact clamp attached to the lead coming from the igniter over the collet of the rear support. This contact may be attached to the lamphouse and must be loosened before attaching to the rear support.
7. Carefully insert the lamp into the lamphouse, passing the anode (+) end of the lamp through the hole in the reflector. Handle the lamp by the metal end caps *only.* Take care **not** to touch or scratch the reflector's surface; do not touch the quartz envelope of the lamp. Rest the cathode (-) end of the lamp into the front lamp holder.
8. Insert the lamp's anode (+) pin into the rear support collet. The pin must be inserted as far into the socket as possible to ensure good conduction and permit full-focus travel of the lamp. Firmly tighten the socket head clamping screw on the positive lead.
9. Slide the negative contact clamp over the cathode (-) and dress the negative lead directly in front of the front lamp support to minimize its shadow. Securely tighten the negative clamp.
10. Remove the protective cover from the xenon lamp. NEVER operate the lamp with the cover on. Be sure to retain all protective materials supplied with the lamp for future use.
11. Inspect the lamp for fingerprints that may have landed on it. Clean with isopropyl alcohol as necessary.
12. Check the arc stabilization magnet mounted to a bracket below the reflector. One magnet pole is marked with paint and should be pointed toward the operator's side of the lamphouse (right side, as viewed from the rear).
13. Inspect your work and double-check the tightness of all electrical connections. It is recommended to establish a routine for periodically checking all electrical connections for tightness, particularly those at the lamp. A loose connection in the DC circuit may cause overheating of contacts and leads and may damage or destroy the lamp. The xenon lamp warranty does *not* allow credit for heat-related damage of this nature.
14. Replace the two internal lamphouse covers, close the outer cover, and secure it with the two black plastic latches.
15. The final step to complete installation is to install the factory-supplied heat filter. This filter was shipped packaged in your accessory kit box. Remove the cover over the beam controls to access the heat filter bracket. The bracket is in between the dimmer and chopper handles. This filter is a narrow glass strip covering only the beam's center portion. One glass surface is coated and marked “XX” and/or imprinted “This Surface Toward Lamp.” The coated glass surface **must** face the lamp, or damaging radiant heat energy will be transmitted to the optical system. DO NOT operate the follow spot with the glass strip heat filter missing, reversed, or deteriorated.

To remove the lamp, wait at least 20 minutes after shutting down (with the blowers operating) before opening the lamphouse. This will allow the internal lamp pressure to reduce to a level permissible for handling, provided that the specified protective clothing is worn.

Reverse the steps of the Lamp Installation Procedure in the section above.

4.2 Lamp Alignment and Operation

CAUTION: Before operating the follow spot, make sure to verify the following conditions:

1. **The protective cover has been removed from the xenon lamp**
2. **The heat filter is installed with the coated surface facing the lamp.**
3. **The two black plastic latches secure the lamphouse access cover.**

See the preceding section for instructions detailing lamp installation for instructions detailing the above. Failure to remove the lamp's protective cover will damage or destroy the xenon lamp. A missing or reversed heat filter will allow radiant heat damage to the optical mechanism and lens system. The lamphouse cover must be installed correctly and secured to actuate all interlock switches and permit lamp ignition.

Energize the system by switching the circuit breaker on the power supply to ON. The follow spot blowers will start. The blowers will operate continuously until the xenon power supply is de-energized or the circuit breaker is turned off.
Place the **LAMP** switch in the ON position, and the lamp will ignite. The SAFETY indicator will also light (see the Troubleshooting section if the indicator does not light). Allow a few minutes for the current to stabilize, and read the lamphouse ammeter. The lamp must be operated within the current range specified by the xenon lamp manufacturer. The ranges for the xenon lamp used are as follows:

Wattage	Nominal Current	Maximum Current
2000	75A	85A
2500	85A	95A
3000	95A	105A
4000	125A	135A

Adjust the xenon power supply as instructed in the power supply manual for the correct operating current. A new xenon lamp is usually operated at a "nominal" current. After prolonged use, the light output will decrease because of the quartz envelope darkening, resulting from ordinary lamp aging. At this time, the current output setting may periodically be increased to compensate for bulb aging but **do not**, at any time, exceed the maximum current level specified. This adjustment over time is unnecessary with the B3-type ballast as it is a constant power device that will automatically compensate for lamp changes.

Open the cover located above the lamphouse instrument panel by loosening the thumb screw at the bottom of the cover and rotating the cover. This exposes the control mechanism for adjusting the position of the xenon lamp.
The center section of the control is a threaded knob that focuses the lamp in relation to the reflector. Turning this adjustment moves the lamp on the horizontal plane into or out of the reflector. Rotating this section *clockwise* moves the lamp *away from* (i.e., forward) the reflector. The small knurled screw to the upper left of this section can be tightened to lock the focusing mechanism in place after the lamp alignment procedure has been completed.

The two large thumb screws to the left and right of the focusing control secure the horizontal and vertical position of the lamp. These two large thumb screws are spring-loaded to provide a degree of friction against the bulkhead section of the control mechanism.

The following method is recommended to position the xenon lamp inside the reflector to project the best light to the stage.

Remove the projection lens (page 30, item 49). You will have to remove the access door on the non-operator side to do this (To do this, remove three of the four screws and rotate the panel open). Make a note of the directional arrows on the lens.
Center the lamp adjustment controls by loosening the two thumbscrews and bringing the assembly into the middle of its travel left, right, and up and down.

Slide the spot size control handle ("trombone") back to its stop at the rearmost position to project the smallest spot possible. Place the iris, choppers, and dimming controls fully open. Project the spot to a wall or similar flat perpendicular surface opposite the follow spot. The image you should see is of the lamp's anode and the front lamp support. The image will be upside down.

Turn the center "Focus Knob" section of the lamp adjustment control, as illustrated above, fully clockwise until a small dark spot is projected on the wall (Spot"A"). At this point, the lamp is defocused at its extreme-forward position. Then rotate the focus knob counterclockwise until a center "hot" spot is defined (Spot "C"). Make sure the image grows and shrinks evenly and is centered.

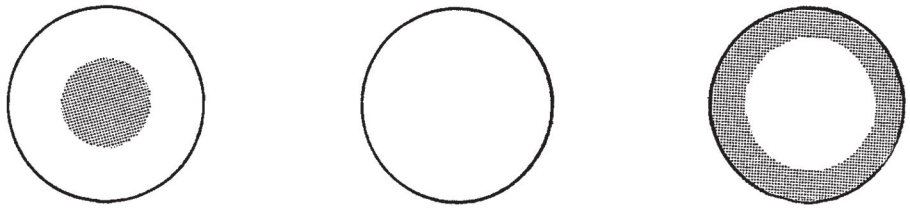

Spot "A" Spot "B" Spot "C"

After correctly positioning the spot, verify that the lamp is at the optical centerline by turning the focus control clockwise to project Spot "A again." The dark spot should remain centered in the spot projection, as shown.

Replace the projection lens and close the access door. Be sure to replace the lens in the original orientation shown by the direction arrows.

Rotate the lamp focus control (center section) to obtain the brightest light with even, flat light distribution (Spot "B"). To sharpen the edge of the spot, rotate the spot fine focus control (large knurled knob) located with the spot size control (trombone).
A second method of aligning the xenon lamp is to project the spot to the stage and obtain a "hot" spot in the projected image using the lamp adjustment controls. Center this "hot" spot in the projected spot by moving the entire control section around the two thumb screws. Once the "hot" spot is centered or slightly above the center in the projected spot, lock the adjustment control in position with the two thumb screws and rotate the focus control (center section) to obtain a bright spot with an even distribution of light. To sharpen the edge of the spot, rotate the knurled focus control knob located on either side of the lens mechanism.

This lamp positioning adjustment should not be disturbed until the xenon lamp is rotated or replaced. Then, the above lamp alignment procedure must be repeated. Only qualified personnel should attempt the lamp alignment process. Misalignment of the lamp can damage the iris and lower the performance of the following spot.

To complete the process rotate the rear cover into the closed position and tighten the thumb screw.

Because of manufacturing tolerances and ordinary lamp aging, it may be necessary to operate one lamp at a slightly higher or lower current than others to obtain an equal light balance between two or more follow spots. These current adjustments are made at the xenon power supply. You can also adjust the lamp focus to better balance the output of a group of follow spots.

To extinguish the arc, place the LAMP switch in the OFF position. The blowers in the lamphouse will continue running until the xenon power supply is de-energized. Allow the blowers to operate and cool the lamp for *at least* ten minutes after extinguishing. This measure is required to comply with the lamp manufacturer's warranty conditions.

To prolong lamp life and to encourage rapid lamp starts, it is recommended to douse out using the fade-out blades rather than extinguishing the lamp during "dark" periods between cues. Multiple ignition pulses and "warm" re-starts consume more power and cause more lamp electrode wear than sustained operation. While repeated ignitions are frequently unavoidable and within design parameters, a (20) minute delay between ignitions is desirable.

Comply with the lamp manufacturer's instructions regarding the rotation of the xenon lamp at specified intervals. To rotate the lamp, loosen both the positive and negative clamps. Grasp the metal end caps and rotate the bulb 90°. Securely re-tighten both clamps.

Return lamps upon which a warranty claim is made to the theatre equipment dealer through whom the unit was purchased. Pack the lamp in its original shipping carton with the protective cover over the lamp. Complete and enclose all warranty forms supplied by the lamp manufacturer. Warranty credit will *not* be allowed if the lamp failure is related to mishandling, incorrect installation, faulty supporting equipment, or abuse.

5 Operation

The Super Trouper IV can be operated from either side (Note: the spot size and fine focus knob can only be accessed from the traditional operator side). Generally, the best position for the operator to stand is near the center of the follow spot, on the right-hand (operator side) side. The angle of tilt and the size or location of the porthole may alter the position for the most convenient operation. After a few minutes of operation, each operator will develop their system and position for operating the unit.

Position the color boomerang with the color arms facing the desired operating side. The boomerang housing can be reversed by loosening the three mounting screws, removing and reversing the boomerang, and re-mount using the (3) mounting holes on the opposite side of the housing. It is advisable to check the sequence of color filters and to place the dense colors (red, green) in the front positions of the boomerang (furthest away from the arc). See the following OPERATION OF THE COLOR BOOMERANG section for detailed instructions.

The horizontal pan and tilt tension adjustment levers are on the yoke assembly. Each can be separately set to give the desired degree of friction on the follow spot swing, from complete release to total lock-down, to suit the application and the individual operator.

The lens system “zoom” brake, which controls the degree of force required to slide the spot size control handle (“trombone”), is located internally on the outrider of the movable projection lens carriage. This adjustment can be accessed via the access plate on the non-operator side of the light. Alternately tightening or loosening the nylon brake tension screw will increase or decrease the force required to operate the spot size control handle. Requirements may vary, and the braking can be adjusted to accommodate the tilt angle and suit the individual operator. See the following OPERATION OF OPTICAL SYSTEM section for details regarding accessing and setting the friction brake.

5.1 Optical System

The iris control is the front lever, which projects through the slots atop the optical system housing. When this lever is to the left (as viewed from the rear of the unit), the largest aperture is provided. Smaller apertures are obtained as the lever is moved to the right.

The spot size control handle (trombone) is on the optical system's right (operator) side. By moving the spot size control handle from one extreme to the other, spot sizes can vary from full flood to small spot. This optical system increases beam intensity when reducing from flood to spot, and maximum intensity is reached when the trombone handle is in the extreme rear position.

The maximum flood spot is obtained by moving the iris control lever to the left (away from the normal operating side) for the largest aperture and moving the trombone handle as far forward as possible.

Smaller-sized spots are projected as the trombone handle is pulled back. Most spot sizes will be produced with the iris's maximum open position. A “diffused” spot

(reduced intensity with a soft edge) is projected by moving the trombone handle forward toward “flood” while closing the iris control.

To adjust the degree of force required to slide the spot size control handle, the nylon brake screw in the outrider of the projection lens carriage must be loosened or tightened. Open the non-operator side access door to make this adjustment.

THE FRICTION BRAKE is a hex-head nylon screw (page 36, item 8) that bears against the slide rod. Tightening the screw applies tension, and loosening the screw relieves tension. A follow spot operated at an extreme down angle will require more brake tension than one operated at a more level angle. Furthermore, the preferred degree of tension may vary between individual operators. Secure the lock nut after setting the desired brake tension and close the access door.

The edge of the projected spot is focused by rotating the focus control knob. This focus control alters the relative distance between the lenses to adjust the optical system for differing throw lengths and degrees of sharpness. The amount of torque required to rotate the focus control is adjustable by tightening or loosening the friction screws (page x, item x) on the off-operator side of the focus mechanism. When making a focus adjustment, observe the spot and rotate the focus knob until the sharpest edge on the projected spot is obtained.

For a “head” spot, or any spot smaller than can be obtained with the trombone handle in its extreme rear position, shift the iris control lever to the right (toward the operating side) for a smaller aperture. The iris control lever should always be returned to its extreme left (open) position before the spot size control (trombone) handle is again moved forward to obtain larger spots.

The masking shutter (chopper) lever is the middle lever projecting through the top of the optical system housing. The masking shutter blades are operated by this lever to shape the projected spot to a rectangle, strip spot, or dousing out to full cutoff. The masking shutter lever's disengaged (fully open) position is to the extreme right (viewed from the rear). Varying degrees of masking to complete the cutoff are obtained by moving the lever to the left.

The angle of the masking shutter blade closure is adjustable. It can be set to compensate for an offset horizontal projection angle, for example, if the following spot is positioned to the left or right of the center stage. An unbalanced condition will exist while adjusting the blades; lock down the follow spot tilt clamp before preceding.

Remove the color boomerang and lens mechanism housing. Loosen the slotted head screws holding each of the masking shutter blades enough to allow adjustments. Ignite the lamp and project a spot. Adjust the angle of the *bottom* blade by tapping it

with a screwdriver so its projected edge lies parallel to the footlights. Operate the masking shutter lever to close the blades. Adjust the upper blade to close against the bottom blade, and tighten the screw. Turn off the lamp, then tighten the screws.

The fade-out mechanism and douser control is the rear lever projecting through the top of the optical system cover. This lever controls the light intensity from complete fade-out (douse) when the lever is to the left to full intensity when the lever is to the right.

Rotating the large knob located immediately behind the spot-size handle (trombone) adjusts the fine focus of the lenses and sharpens the edge of the spot. Refocusing the edge of the spot may be necessary after zooming from flood to small spot and from spot to flood.

5.2 Color Boomerang

The color boomerang has six two-part filter holders (51928000 gel frame with slide channel and 51376000 cover plate). The Follow Spot Accessory Kit includes six sheets of assorted color gels. Your Strong Lighting Dealer can supply additional colors and filter holders. Specify ROSCOLUX® or equivalent *high-temperature* gels.

To operate individual color filters, lower the desired filter selector lever. A rocker catch in the color disc housing holds the filter in position. To release a color, push the filter release arm in or engage another color, thus releasing the previous color automatically.

To replace filter holders, open the front cover of the color disc housing by removing the thumb screw on the top of the housing. The upper portion of the housing is hinged to allow access to the color holders. Slide the filter holders up and off the color arms. Replace gel frames as required and secure the front cover of the disc housing cover when finished.

NOTE:

> WHEN PLACING COLOR FILTERS in the boomerang, the **less** dense colors (pink, amber) should be placed in the holders toward the *rear* of the boomerang (toward the light source). Those of **greater** density (red, green) should be placed in the holders toward the *front* of the boomerang (away from the light source). Remember to reverse the gel sequence if reversing the boomerang for left/right operation.

COLOR TEMPERATURE CORRECTION FILTERS, required for use with film and video, can be installed in place of one or more colors. They are available from theatrical supply dealers.

6 Maintenance

The Super Trouper IV Follow Spot system requires very little maintenance to keep it in good working order. Routine cleaning is generally sufficient.

The reflector and the heat filter should be cleaned periodically with a clean, soft, lint-free cloth to remove dust from the coated surfaces. If excessively soiled, use a commercial glass cleaner that does not contain ammonia.

WARNING: The surface of your reflector has been coated with several layers of thin-film coatings that give your reflector high-efficiency reflective properties. Any damage to these coatings will diminish the reflector's reflective properties and shorten the reflector's useful life.

The xenon lamp should be checked occasionally for the presence of any foreign material on the envelope. Any dirt or other foreign material will rapidly burn into the quartz material and possibly shorten bulb life. Use isopropyl alcohol and a clean, lint-free cotton cloth to remove dirt, fingermarks, and other contaminants.

CAUTION:

Observe all safety procedures when working around the exposed lamp.
CHECK ALL ELECTRICAL TERMINATIONS periodically for tightness. Note especially the xenon lamps connections and other leads in the DC circuit.

The inside of the lamphouse compartment and cover louvers should be cleaned periodically, depending on the dust conditions at each installation. The blower air inlets in the side rails may require cleaning to remove dust build-up, which accumulates over time. If dust build-up impedes the blower impellers or obstructed airflow allows the squirrel cage blower motor to overheat, a thermal switch in the blower motor will shut down the blower. If the squirrel cage blower shuts down repeatedly, it is necessary to dismount it from the follow spot base rail for a thorough cleaning. Vacuum or blow out the (3) impellers.

The optical system lenses must be kept clean to prevent light reduction in the projected spot. To access the lenses, tighten the horizontal pan and vertical tilt locking clamps and open the access door on the non-operator side.

CLEAN THE OPTICAL SYSTEM LENSES using lint-free lens tissues with any cleaner approved for coated projection lenses. If the projection lens assembly is removed

from its barrel for cleaning, replace the lens with the arrow (engraved on the barrel) pointing toward the iris.

When transporting the follow spot from one venue to another, it is recommended, but not required, that the xenon lamp be removed and placed in its original shipping carton with the cover on to ensure against breakage. If the follow spot is moved from one position to another within the same venue, the unit may be transported with the lamp installed, assuming reasonable care. *DO NOT* move the follow spot until the lamp has cooled to room temperature. It is permissible to transport the follow spot from venue to venue with the lamp installed so long as the road case used to move the fixture has been designed to protect it from significant bumps and vibration.

Inspecting the rest of the fixture during a lamp change is good timing to address issues before they become problems. Use the checklist below to review the condition of your fixture.

6.1 Maintenance Checklist

Date:				Inspector/Technician:	
Model:		Serial Number:		**Cold Inspection: Power Off, Lamp Off, Unit Open**	
Hour Reading:				Reflector Condition:	Cleaned? Yes/No:
Hot Inspection: Power On, Lamp On				Lamp Condition:	
Volt/Amp Meter Readings				Connector Condition	
Time	Volts DC	Amps DC	Watts	MS Connector:	
At Strike				Fixture to Power Supply Cable:	
After 10 minutes				Power Input Cable:	
Watts = Volts * Amps				Heat Filter Glass Condition:	Cleaned? Yes/No:
Lamp House Blowers:				Front Glass Condition:	Cleaned? Yes/No:
Douser Operation:				Douser Blade Condition:	
Tilt Operation:				Latches:	
Pan Operation:				Lamp Leads (Front and Rear:	

7 Troubleshooting

7.1 Normal Operation

When the switch for the main AC supply line to the xenon power supply is in the ON position, and the circuit breaker on the switching power supply is ON, the green AC Power ("voltage input") light on the xenon power supply will glow. The blowers in both the lamphouse and the xenon power supply will start.

Operation of the lamphouse blowers will maintain normal temperature in the lamphouse. If the lamphouse top cover is correctly installed and locked, the cover interlock switch closures will complete the control circuit to the LAMP switch.

When the "LAMP" switch is placed in the ON position, the 115 V.AC control circuit (wires 5 & 6) in the lamphouse will energize the power supply circuitry, providing DC current to the igniter and lamp. The blue SAFETY indicator light on the xenon power supply will glow. The power supply will then deliver high open circuit (approximately 150-200 V.DC "no load") voltage to the lamphouse. This high DC voltage will actuate the Solid State DC Pulse Igniter.

There will be an audible high-voltage arc "ping" across the lamp electrodes. The lamp should ignite immediately after one or two of these high-voltage pulses. Once lamp ignition is sustained, the lamp current will adjust to the output setting of the xenon power supply. The DC voltage will fall to the xenon lamps sustaining voltage level, and the Solid State DC Pulse Igniter will cease generating high voltage pulses.

Excessive ignition pulses before lamp ignition usually indicate either a low DC output setting or the presence of a high voltage short. Adjust the lamphouse DC current according to the INSTALLATION - OPERATION section of the Xenon Power Supply manual to the correct level specified by the lamp manufacturer. Operating a xenon lamp *below* its rated current will *not* prolong lamp life; sustained operation below the rated current will cause ignition problems as the lamp ages. A "warm" or aged xenon lamp might require multiple strikes. A short delay between ignition pulses is normal. The capacitors in the xenon power supply must recharge between each high voltage "no load" discharge.

The Solid-State DC Pulse Igniter will remain out of the circuit while the xenon lamp operates normally. No ignition pulses will be generated until the xenon power supply again delivers an open-circuit DC voltage above 150 V.DC.

ELAPSED HOURS will begin counting up when the xenon lamp sustains ignition. A faulty hour meter will not prevent lamp ignition. Record the meter reading when first using a new lamp; the hour meter is not resettable, so accurate figures should be used

when entering bulb hours to maintain a permanent record of the follow spot system performance.

7.2 Trouble Chart

In the event of an ignition failure, check the status of the indicator lights mounted to the lamphouse control panel and the connected xenon power supply.

INDICATOR LIGHT FUNCTION:

"SAFETY" - This indicator lights only when the control circuit is complete, meaning all access covers are closed and locked.

The "SAFETY" indicator on the control panel must be lighted to indicate the correct conditions for igniting the xenon lamp. The MAIN LINE circuit breaker must be in the ON position.

BEFORE PRECEDING with the following Trouble Chart, check that the green AC Power indicator light on the xenon power supply is glowing, showing that AC power is present. The "SAFETY" indicator on the lamphouse control panel should also be lighted, showing correct continuity through the lamphouse/power supply interconnect cable.

ALLOW THE XENON LAMP to thoroughly cool to room temperature before opening the lamphouse enclosure, and allow capacitors to drain stored energy. The lamphouse control circuit operates on 115 V.AC; *exercise extreme caution when taking voltage measurements in a power ON condition.* Measure xenon power supply voltages at the MS connector.

EXCHANGE OF COMPONENTS (e.g., lamps, igniters, power supplies) between similar Strong Super Trouper IVs to aid in the diagnosis of a problem is encouraged. This will not damage equipment and will not void the warranty.

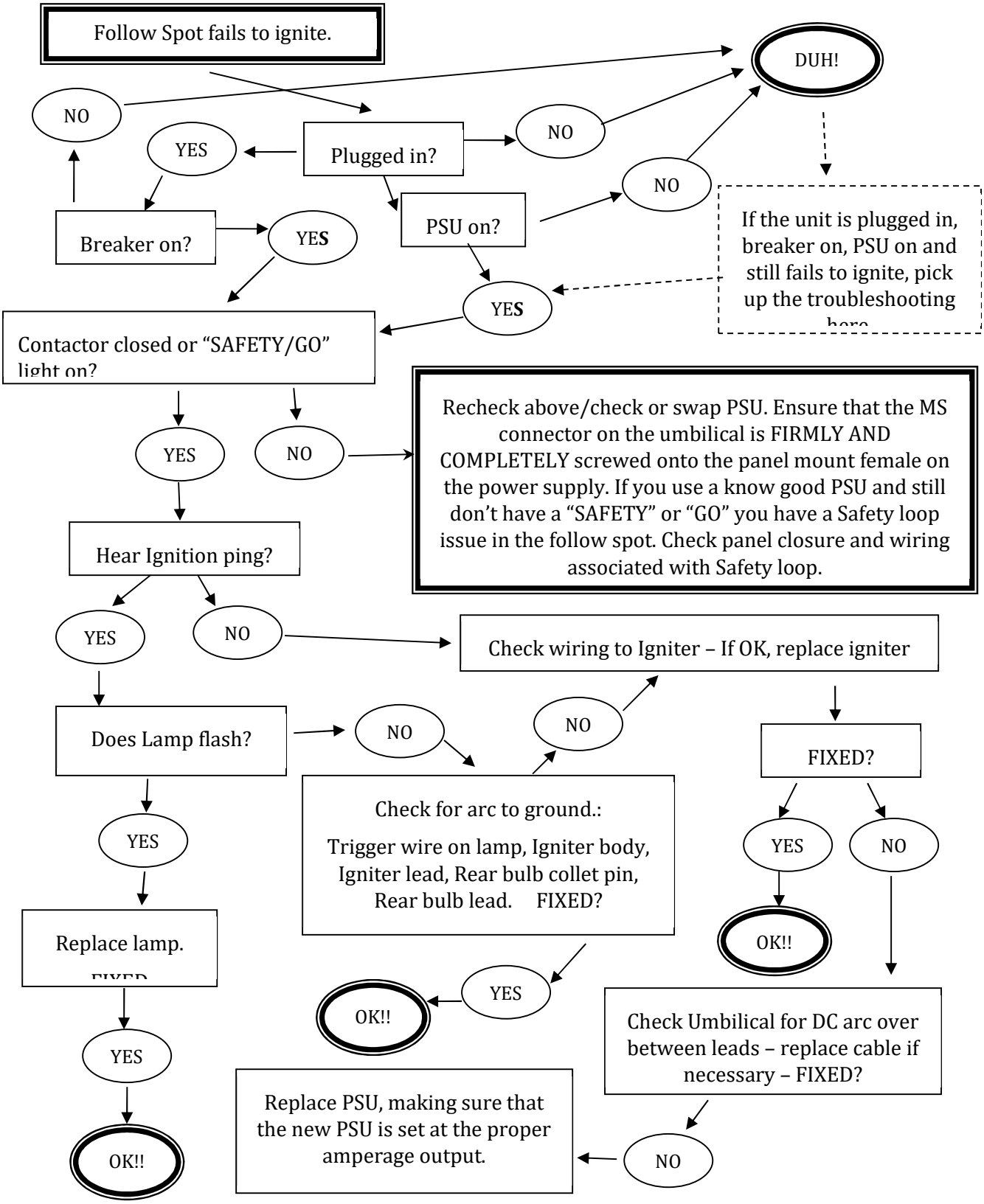
Follow Spot fails to ignite.
DUH!
NO
YES
Plugged in?
NO
NO
Breaker on?
YES
PSU on?
If the unit is plugged in, breaker on, PSU on and still fails to ignite, pick up the troubleshooting
YES
Contactor closed or "SAFETY/GO" light on?
YES
NO
Recheck above/check or swap PSU. Ensure that the MS connector on the umbilical is FIRMLY AND COMPLETELY screwed onto the panel mount female on the power supply. If you use a know good PSU and still don't have a "SAFETY" or "GO" you have a Safety loop issue in the follow spot. Check panel closure and wiring associated with Safety loop.
Hear Ignition ping?
YES
NO
Check wiring to Igniter – If OK, replace igniter
Does Lamp flash?
NO
NO
FIXED?
Check for arc to ground.:
Trigger wire on lamp, Igniter body, Igniter lead, Rear bulb collet pin, Rear bulb lead. FIXED?
YES
YES
NO
OK!!
Replace lamp.
YES
OK!!
Check Umbilical for DC arc over between leads – replace cable if necessary – FIXED?
YES
OK!!
Replace PSU, making sure that the new PSU is set at the proper amperage output.
NO

8 Exploded Views

This page is intentionally blank.

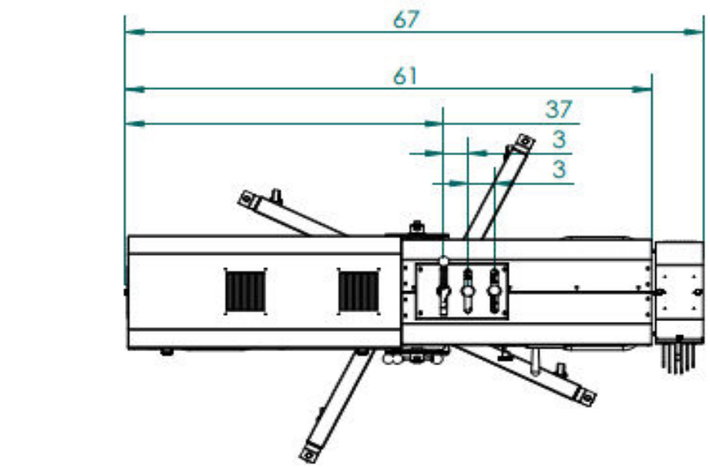

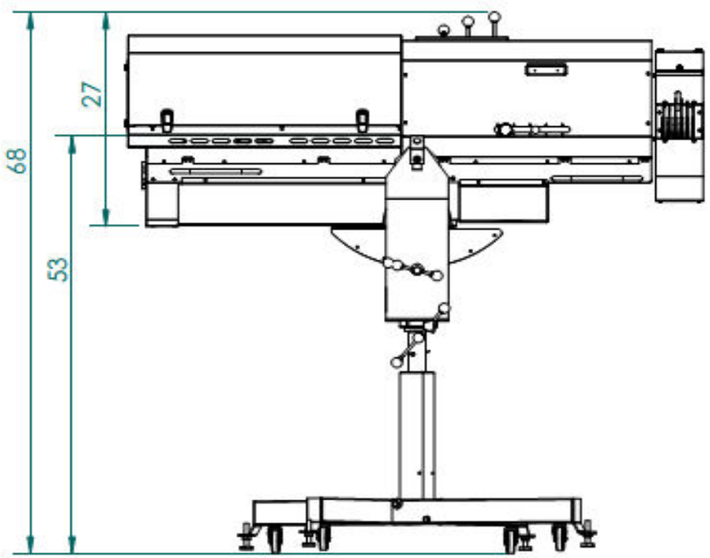

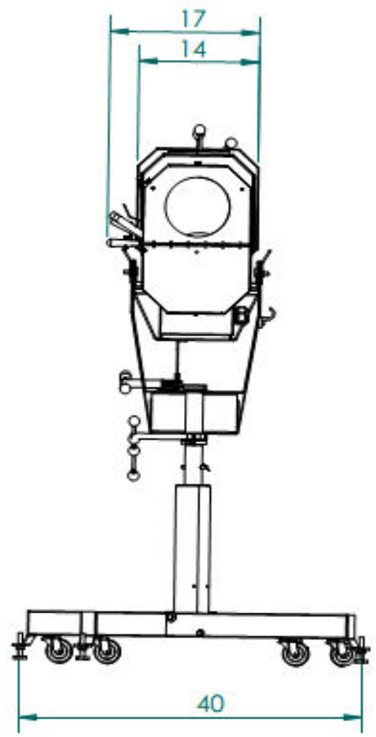

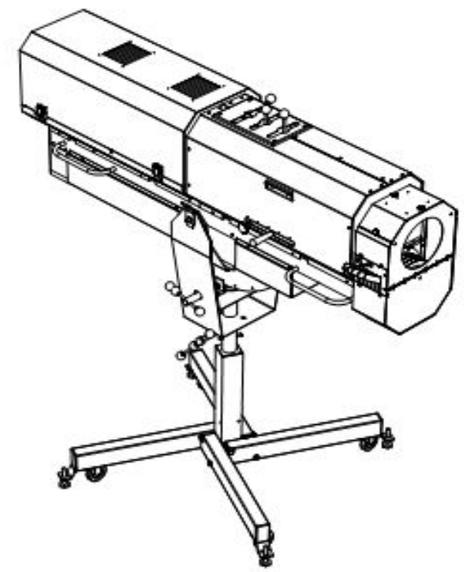

PROPRIETARY AND CONFIDENTIAL

THE INFORMATION CONTAINED IN THIS DRAWING IS THE SOLE PROPERTY OF STRONG LIGHTING. ANY REPRODUCTION IN PART OR AS A WHOLE WITHOUT THE WRITTEN PERMISSION OF STRONG LIGHTING IS PROHIBITED.

UNLESS OTHERWISE SPECIFIED:

DIMENSIONS ARE IN INCHES

TOLERANCES:
ANGULAR: X.X = ±1.0° X.XX ± 0.5°
TWO PLACE DECIMAL ±.010
THREE PLACE DECIMAL ±.005

MATERIAL
AS BOM

FINISH

DO NOT SCALE DRAWING

	NAME	DATE
DRAWN	CJC	2/21/24
CHECKED		
ENG APPR.		
MFG APPR.		
Q.A.		

COMMENTS:

REMOVE ALL BURRS AND SHARP EDGES

STRONG LIGHTING
10533 Chandler Road, SUITE 101
La Vista, NE 68128
402-506-9096 tel, 402-256-1863 fax

TITLE: SUPER TROUPER IV

SIZE B | DWG. NO. 24000-12 | REV

SCALE: 1:16 | SHEET 1 OF 5

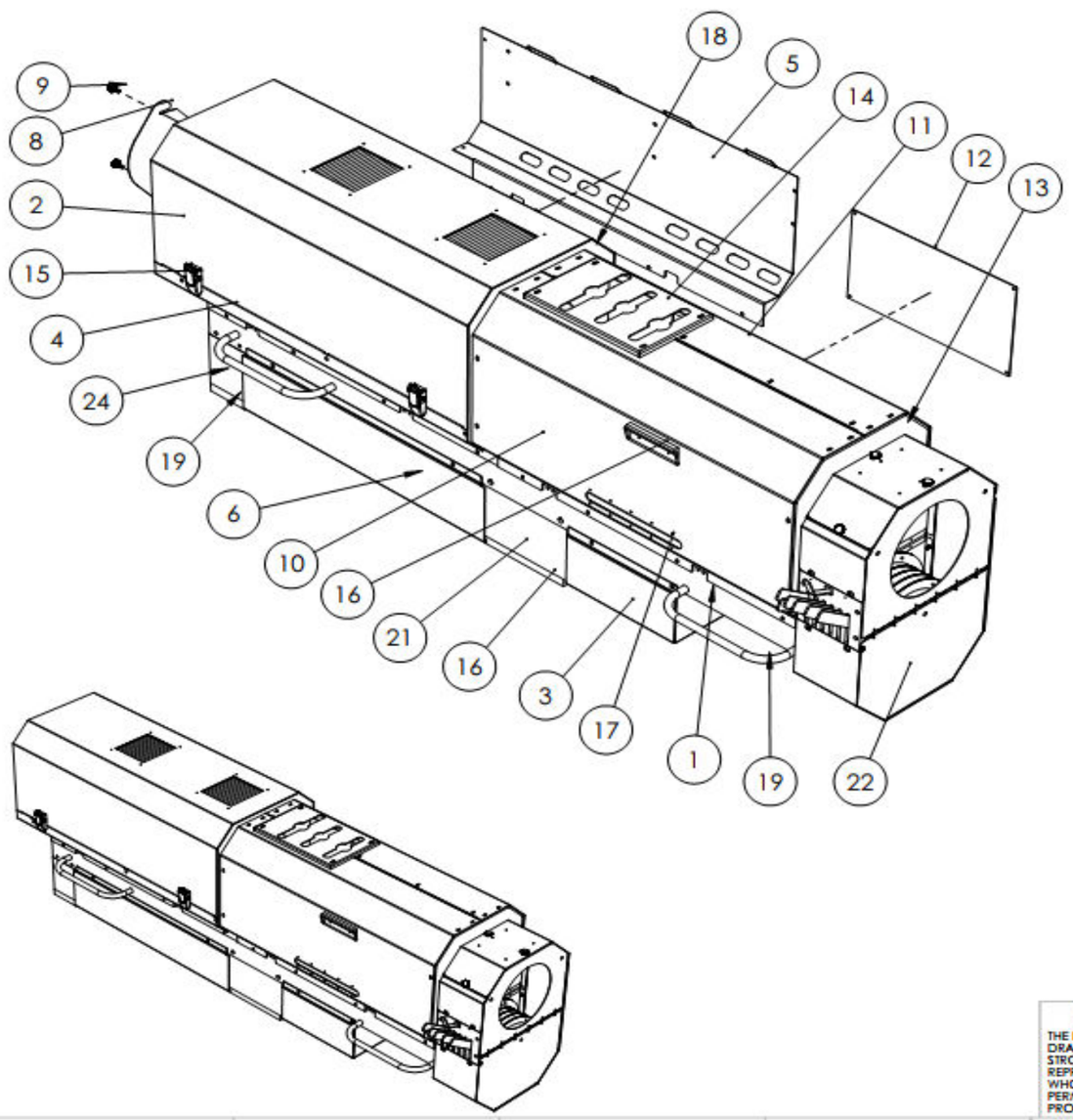

ITEM NO.	PART NUMBER	DESCRIPTION	
1	9700601	BASE CHANNEL ASSEMBLY, St IV	1
2	9700602	TOP COVER ASSY STIV	1
3	9700604	BOTTOM FRONT COVER STIV	1
4	7200162	COVER BOTTOM EDGE	1
5	7200163	COVER BACK	1
6	9700607	BOTTOM REAR REAR STIV	1
7	7200158	COVER REAR	1
8	7200658	ACCESS PLATE GLAD IV LAMP ADJUST	1
9	31875000	SCREW #10-32 x 1/2 THUMB ASSEMBLY	2
10	9700609	FRONT COVER SIDE OP	1
11	9700608	FRONT COVER SIDE NON-OP	1
12	9700610	NON-OP REMOVEABLE COVER	1
13	9700611	FRONT COVER STIV	1
14	9700740	TOP ACCESS COVER GLAD IV	1
15	20116	LATCH V7 OVER CENTER BLACK	2
16	7110001	CLIPBOARD WIRE TYPE	1
17	25093000	BAFFLE SIDE ASSEMBLY	2
18	7200157	BULKHEAD FRONT	1
19	25221000	HANDRAIL 12"	4
20	25223000	BRACE, BOTTOM	1
21	7200278	SUPPORT LEFT & RIGHT BOTTOM	2
22	24124000	COLOR CHANGER STII & III	1
23	9700614	REAR SUPPORT NON-OP	1
24	9700038	REAR SUPPORT	1
25	9700052	OP & NON-OP BOTTOM PLATE	1

UNLESS OTHERWISE SPECIFIED:
DIMENSIONS ARE IN INCHES
TOLERANCES:
ANGULAR: X.X = ±1.0° X.XX ± 0.5°
TWO PLACE DECIMAL ±.010
THREE PLACE DECIMAL ±.005
MATERIAL AS BOM
FINISH
DO NOT SCALE DRAWING

	NAME	DATE
DRAWN	CIC	2/21/24
CHECKED		
ENG APPR.		
MFG APPR.		
Q.A.		

COMMENTS:
REMOVE ALL BURRS AND SHARP EDGES

STRONG LIGHTING
10533 Chandler Road, SUITE 101
La Vista, NE 68128
402-506-9096 tel, 402-256-1863 fax

TITLE: SUPER TROUPER IV

SIZE B | DWG. NO. 24000-12 | REV

SCALE: 1:8 | SHEET 2 OF 5

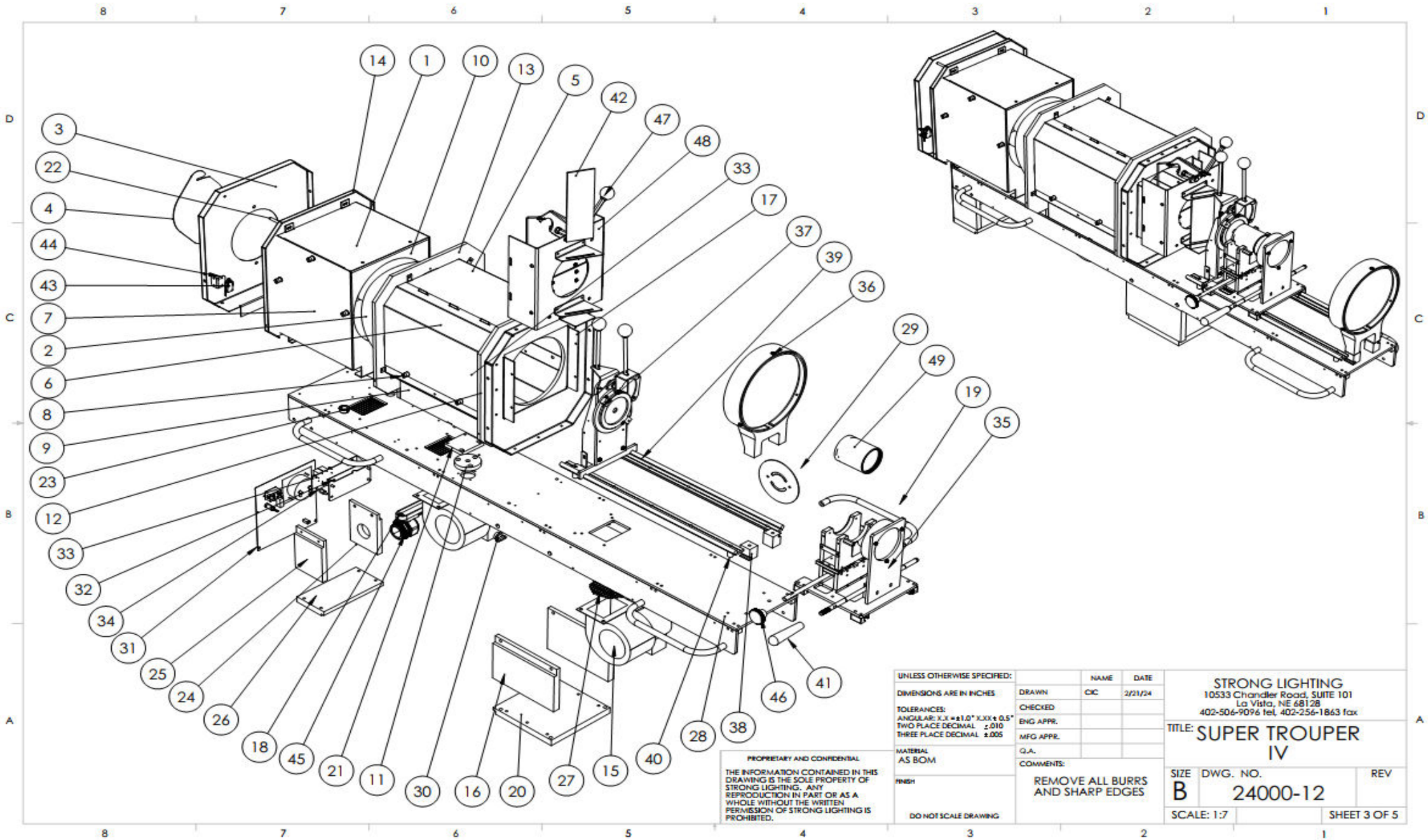
14
1
10
13
5
42
47
48
33
17
37
39
36
29
49
19
35
3
22
4
44
43
7
2
6
8
9
23
12
33
32
34
31
25
24
26
18
45
21
11
30
16
20
27
15
40
28
38
46
41
UNLESS OTHERWISE SPECIFIED:
DIMENSIONS ARE IN INCHES
TOLERANCES:
ANGULAR: X.X = ±1.0° X.XX ± 0.5°
TWO PLACE DECIMAL ±.010
THREE PLACE DECIMAL ±.005
MATERIAL
AS BOM
FINISH
DO NOT SCALE DRAWING
PROPRIETARY AND CONFIDENTIAL
THE INFORMATION CONTAINED IN THIS DRAWING IS THE SOLE PROPERTY OF STRONG LIGHTING. ANY REPRODUCTION IN PART OR AS A WHOLE WITHOUT THE WRITTEN PERMISSION OF STRONG LIGHTING IS PROHIBITED.
NAME
DATE
DRAWN
CIC
2/21/24
CHECKED
ENG APPR.
MFG APPR.
Q.A.
COMMENTS:
REMOVE ALL BURRS AND SHARP EDGES
STRONG LIGHTING
10533 Chandler Road, SUITE 101
La Vista, NE 68128
402-506-9096 tel, 402-256-1863 fax
TITLE:
SUPER TROUPER IV
SIZE
B
DWG. NO.
24000-12
REV
SCALE: 1:7
SHEET 3 OF 5

ITEM NO.	PART NUMBER	DESCRIPTION	
1	7200160	BAFFLE REAR TOP	1
2	25361000	REFLECTOR 13" GLAD IV	1
3	7200158	COVER REAR	1
4	7200658	ACCESS PLATE GLAD IV LAMP ADJUST	1
5	7200166	BAFFLE FRONT TOP	1
6	7200167	BAFFLE FRONT ACCESS	1
7	7200161	BAFFLE REAR ACCESS	1
8	7151008	SCREW #10-32 CAPTIVE PANEL SPRING EJECT	5
9	7200165	BAFFLE FRONT BOTTOM	2
10	7200159	BAFFLE REFLECTOR	1
11	81301000	FEED-THRU TERMINAL BODY	1
12	7200157	BULKHEAD FRONT	1
13	7200156	BULKHEAD REFL MNT	1
14	9700384-1	BULKHEAD, REAR - SHEET METAL	1
15	8133026	BLOWER 148 CFM 220VAC 50/60HZ	3
16	7200278	SUPPORT LEFT & RIGHT BOTTOM	2
17	7200173	DOWSER SUPPORT	1
18	81247000	SHUNT 200A 50mV	1
19	25221000	HANDRAIL 12"	4
20	25223000	BRACE, BOTTOM	1
21	7200287	LAMP SPACER GLAD IV	1
22	608250	STANDOFF #8-32 x 2.5 F-F .25 ROUND AL	1
23	3107001	BUSHING 7/8" BLACK PHENOLIC	1
24	9700614	REAR SUPPORT NON-OP	1
25	9700038	REAR SUPPORT	1
26	9700052	OP & NON-OP BOTTOM PLATE	1
27	7200286	FAN GRILL	3
28	9700601	BASE CHANNEL ASSEMBLY, St IV	1
29	9700615	BLOWER COVER	3
30	4113005	7286 CONN 1/2 APPLETON	4
31	9700616	PANEL ANALOG METER UL ST IV	1
32	7200209	TERMINAL MOUNT	1
33	7201433	PCA TERMINAL BOARD GLAD IV	1
34	610051	STANDOFF #10-32 x 1/2 M-F 3/8 HEX AL	4
35	9700618	LENS CARRAIGE	1
36	25090000	Super Trouper III Front Lens Assy	1
37	24373000	APERTURE IRIS ASSEMBLY	1
38	9700640	FRONT LENSE SPACER	2
39	9700653	RAIL STIV WS-10-540	2
40	9700654	SPACER .25 X .5 OD 1 ROUND	4
41	51509000	HANDLE 3/8-16 TAPERED RED FEMALE THREADS	1
42	65122B00	HEAT FILTER	1

ITEM NO.	PART NUMBER	DESCRIPTION	
43	10681	MINIATURE SNAP ACTION SWITCH	1
44	9700655	BRACKET, MINIATURE SWITCH	1
45	3198165	CORD GRIP 7/8"-1.26"	1
46	9700446	FINE FOCUS ADJ KNOB	1
47	10120	KNOB BALL RED	3
48	7200261	DOUSER ASSEMBLY GLAD IV	1
49	44239c00	LENS	1

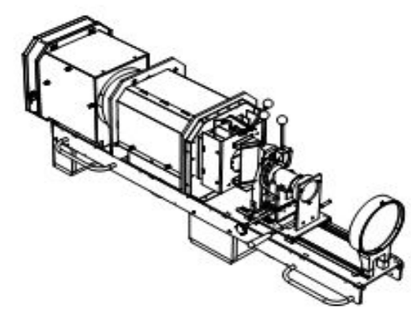

PROPRIETARY AND CONFIDENTIAL

THE INFORMATION CONTAINED IN THIS DRAWING IS THE SOLE PROPERTY OF STRONG LIGHTING. ANY REPRODUCTION IN PART OR AS A WHOLE WITHOUT THE WRITTEN PERMISSION OF STRONG LIGHTING IS PROHIBITED.

UNLESS OTHERWISE SPECIFIED:
DIMENSIONS ARE IN INCHES
TOLERANCES:
ANGULAR: X.X = ±1.0° X.XX ± 0.5°
TWO PLACE DECIMAL ±.010
THREE PLACE DECIMAL ±.005

MATERIAL: AS BOM

FINISH

DO NOT SCALE DRAWING

	NAME	DATE
DRAWN	CIC	2/21/24
CHECKED		
ENG APPR.		
MFG APPR.		
Q.A.		

COMMENTS:
REMOVE ALL BURRS AND SHARP EDGES

STRONG LIGHTING
10533 Chandler Road, SUITE 101
La Vista, NE 68128
402-506-9096 tel, 402-256-1863 fax

TITLE: SUPER TROUPER IV

SIZE B | DWG. NO. 24000-12 | REV

SCALE: 1:8 | SHEET 4 OF 5

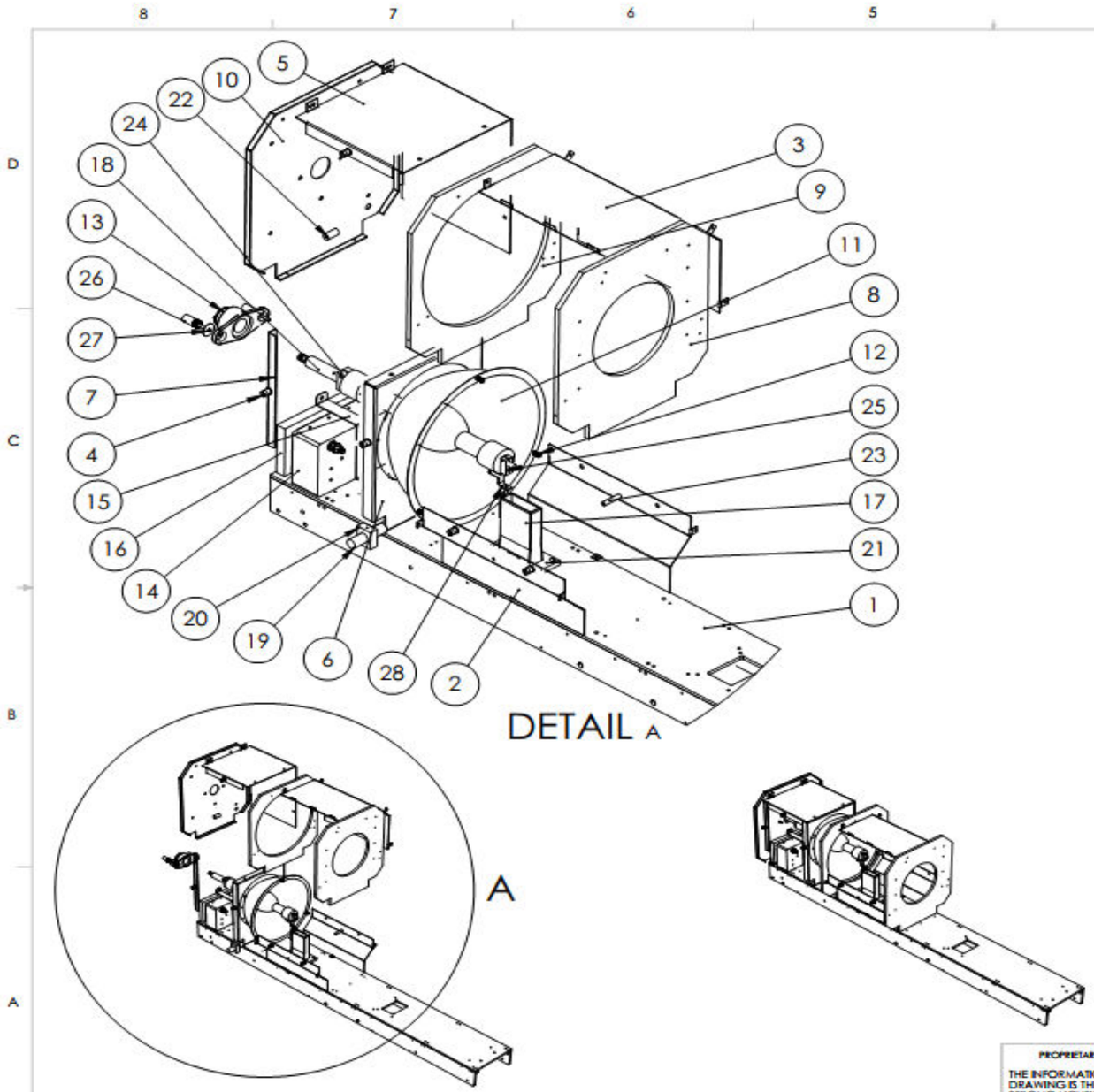

ITEM NO.	PART NUMBER	DESCRIPTION	QTY.
1	9700601	BASE CHANNEL ASSEMBLY, St IV	1
2	7200165	BAFFLE FRONT BOTTOM	2
3	7200166	BAFFLE FRONT TOP	1
4	7151008	SCREW #10-32 CAPTIVE PANEL SPRING EJECT	5
5	7200160	BAFFLE REAR TOP	1
6	7200159	BAFFLE REFLECTOR	1
7	7200174	BRACKET INSIDE COVER	1
8	7200157	BULKHEAD FRONT	1
9	7200156	BULKHEAD REFL MNT	1
10	9700384-1	BULKHEAD, REAR - SHEET METAL	1
11	25361000	REFLECTOR 13" GLAD IV	1
12	2158040	SPRING COMPRESSION	3
13	65827000	FOCUS ASSEMBLY WITHOUT CATHODE	1
14	39862001	IGNITER SOLID STATE GLAD IV	1
15	7200169	IGNITER MOUNT	1
16	7200395	IGNITER INSULATOR PLATE	1
17	40107000	AIR DUCT CASTING	1
18	7200285	ANODE SUPPORT ASSEMBLY 4.5k GLAD IV	1
19	00M15315	MAGNET, ARC STABILIZATION	1
20	81137000	CLAMP	1
21	7200287	LAMP SPACER GLAD IV	1
22	708100	SPACER #8 x 1.0, .50 ROUND AL	1
23	708150	SPACER #8 x 1-1/2, 5/16" ROUND AL	1
24	7200282	ANODE CLAMP 9.5mm 4.5k HS	1
25	39191000	CLAMP LAMP NEGATIVE	1
26	37985000	THUMB SCREW ASSEMBLY	2
27	65150000	WASHER #10 x 1" OD FLAT FENDER	2
28	9700728	FRONT LAMP SUPPORT	1

UNLESS OTHERWISE SPECIFIED:
DIMENSIONS ARE IN INCHES
TOLERANCES:
ANGULAR: X.X ±1.0° X.XX ± 0.5°
TWO PLACE DECIMAL ±.010
THREE PLACE DECIMAL ±.005

MATERIAL
AS BOM

FINISH

DO NOT SCALE DRAWING

	NAME	DATE
DRAWN	CIC	2/21/24
CHECKED		
ENG APPR.		
MFG APPR.		
Q.A.		

COMMENTS:
REMOVE ALL BURRS AND SHARP EDGES

STRONG LIGHTING
10533 Chandler Road, SUITE 101
La Vista, NE 68128
402-506-9096 tel, 402-256-1863 fax

TITLE: SUPER TROUPER IV

SIZE B | DWG. NO. 24000-12 | REV

SCALE: 1:8 | SHEET 5 OF 5

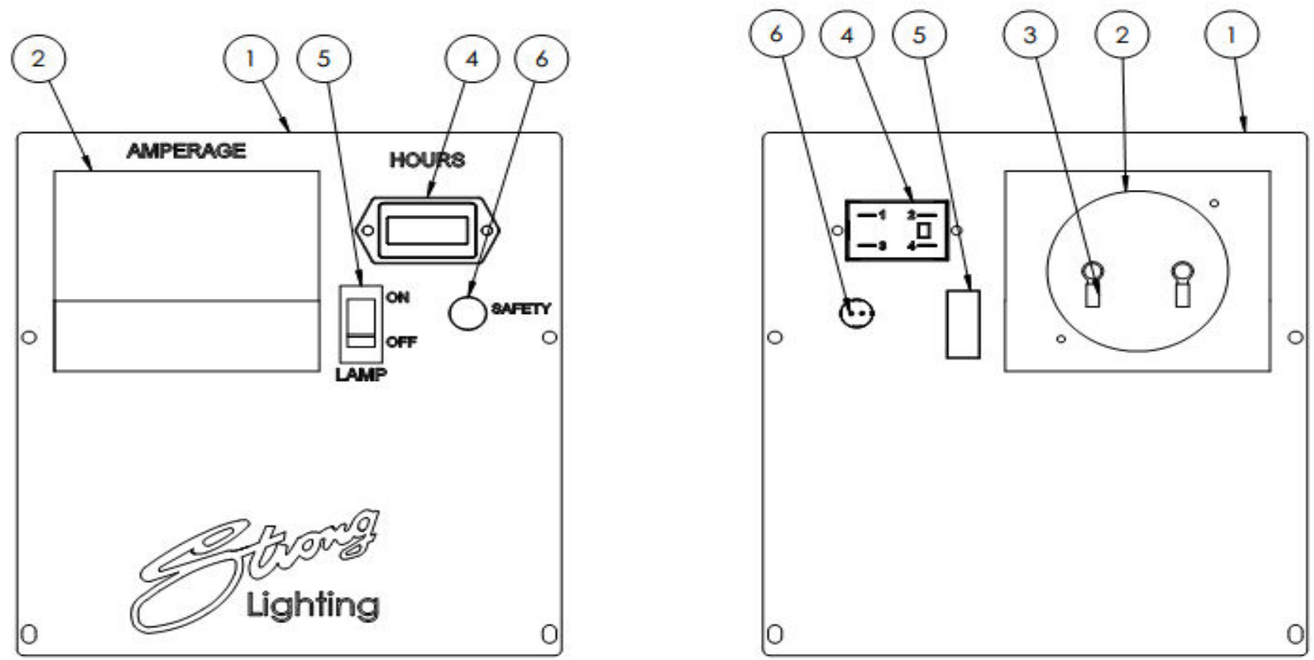

ITEM NO.	PART NUMBER	DESCRIPTION	QTY.
1	9700617	CONTROL PANEL STIV	1
2	8132009	METER 0-200A	1
3	7201317	HARNESS AMPMETER GLAD IV UL	1
4	10702	HOUR METER RETANGULAR UNIVERSAL INPUT	1
5	20242	SWITCH, ROCKER SPST	1
6	9700399	LED BLUE 120VAC PANEL MOUNT	1

PROPRIETARY AND CONFIDENTIAL

THE INFORMATION CONTAINED IN THIS DRAWING IS THE SOLE PROPERTY OF STRONG LIGHTING. ANY REPRODUCTION IN PART OR AS A WHOLE WITHOUT THE WRITTEN PERMISSION OF STRONG LIGHTING IS PROHIBITED.

UNLESS OTHERWISE SPECIFIED:

DIMENSIONS ARE IN INCHES

TOLERANCES:
ANGULAR: X.X = ±1.0° X.XX ± 0.5°
TWO PLACE DECIMAL ±.010
THREE PLACE DECIMAL ±.005

MATERIAL
AS BOM

FINISH

DO NOT SCALE DRAWING

	NAME	DATE
DRAWN	CJC	3/29/23
CHECKED		
ENG APPR.		
MFG APPR.		
Q.A.		

COMMENTS:

REMOVE ALL BURRS AND SHARP EDGES

STRONG LIGHTING
10533 Chandler Road, SUITE 101
La Vista, NE 68128
402-506-9096 tel, 402-256-1863 fax

TITLE: ANALOG PANEL ASSEMBLY

SIZE B | DWG. NO. 9700616 | REV

SCALE: 1:2 | SHEET 1 OF 1

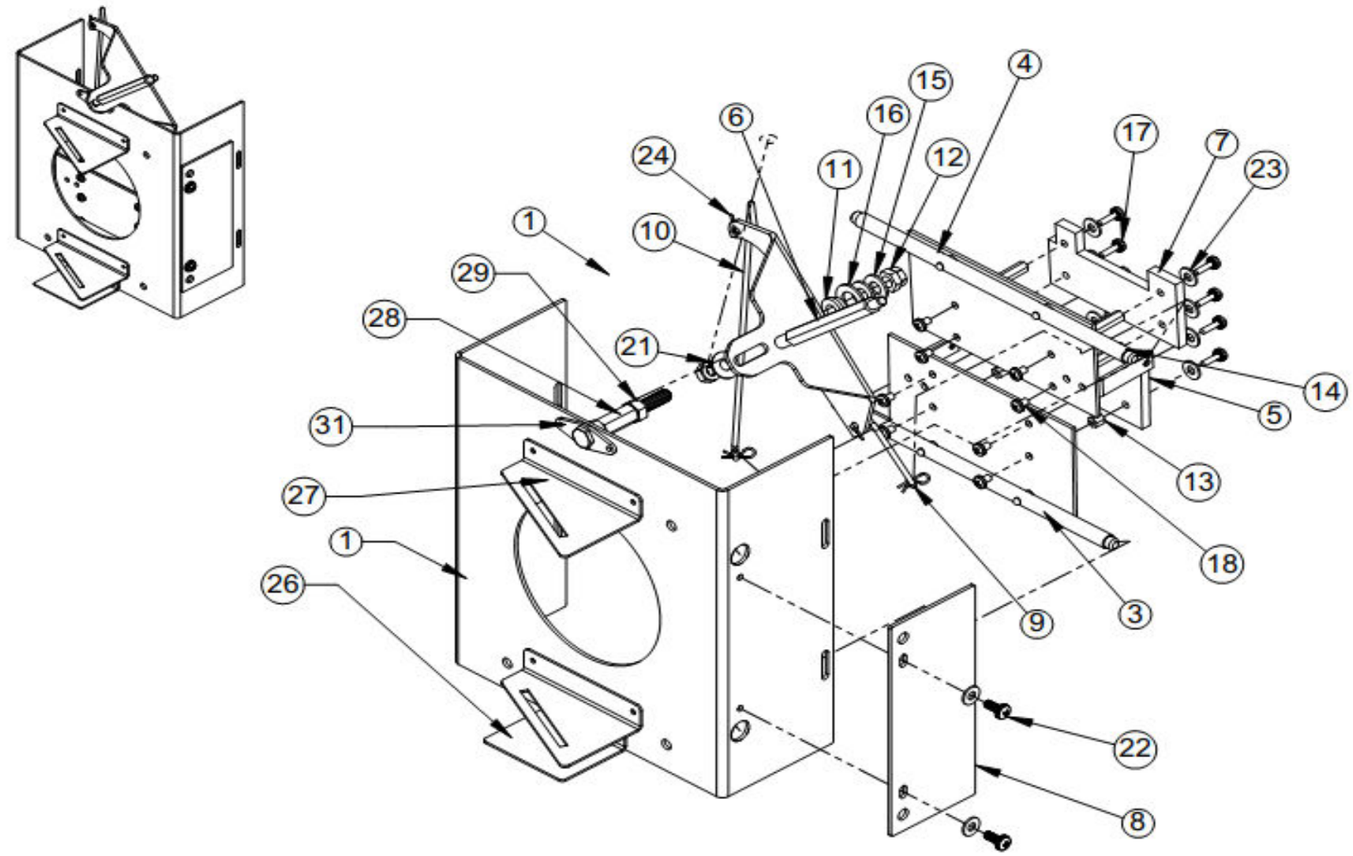

ITEM	QTY	PART No.	DESCRIPTION
1	1	7200212	FADE OUT BRACKET ASSEMBLY GLAD IV
2	1	7200262	BRACKET
3	1	7200268	BLADE ASSEMBLY UPPER FADE OUT
4	1	7200265	BLADE ASSEMBLY UPPER FADE OUT
5	1	7200271	BLADE FADE OUT LOWER SHIELD
6	1	51155000	CHOPPER BLADE HANDLE
7	1	7200272	BLADE FADE OUT UPPER SHIELD
8	1	83351000	RETAINER, PIVOT SHAFT
9	1	7200273	FADE OUT CONNECTING ROD UPPER
10	1	7200274	FADE OUT CONNECTING ROD LOWER
11	1	51153000	CHOPPER BLADE SPACER BUSHING
12	1	4318004	NUT 5/16-18 FLEXIBLE LOCK
13	4	608020	STANDOFF #8-32 x .25, F-F, .25 HEX STEEL
14	4	608080	STANDOFF #8-32 x 7/8, F-F, .25 HEX AL
15	2	4317102	WASHER 5/16 x 3/4 OD SS
16	1	4507106	WASHER 1/2 x 7/8 OD BRONZE
17	8	4080506	SCREW #8-32 x 1/2 SEMS SS
18	9	4080250	SCREW #8-32 x 1/4 SEMS SS
19	3	4251500	1/4-20 x 1 1/2 HEXHD SS
20	2	4258001	NUT 1/4-20 SS
21	1	4257102	WASHER 1/4" FLAT SS
22	2	4100507	SCREW #10-32 x 1/2 SEMS SS
23	10	4107101	WASHER #10 FLAT SS
24	4	01704000	HITCH PIN CLIP
25	2	4257000	WASHER 1/4" SPLIT SS
26	1	9700555	HEAT FILTER SUPPORT BRACKET
27	2	9700664	BRACKET, TOP
28	1	9700496	NUT, COUPLING 5/16-18 x 1.0 HEX SS
29	2	4318005	NUT 5/16-18 SS
30	1	4312500	SCREW 5/16-18 x 2-1/2 FULL THREAD HEX SS
31	1	9700495	BRACKET, BOLT STOP

REVISIONS				
ZONE	REV.	DESCRIPTION	DATE	APPROVED
	A	FIRST RUN CHANGES ECN 23761 BY JFB	01/22/2003	
	B	UPDATE DRAWING ECN 24242 BY JFB	04/15/2003	RMS
	C	7200504 WAS 40939000 ECN 24364 BY KJN	05/27/2003	

UNLESS OTHERWISE SPECIFIED
DIMS ARE IN INCHES
BREAK SHARP EDGES .010 X 45°
TOLERANCES ON ANGLE ± 1°
4 PL ±.0005, 3 PL ±.005, 2 PL ±.02
INTERPRET DIM AND TOL PER
ASME Y14.5M 1994

THIRD ANGLE PROJECTION

DO NOT SCALE DRAWING

SYMBOLS

STRAIGHTNESS
FLATNESS
PARALLELISM
PERPENDICULARITY
SYMMETRY
CONCENTRICITY

STRONG LIGHTING
10533 Chandler Road, SUITE 101La Vista, NE 68128
402-506-9096 tel, 402-256-1863 fax

TITLE: DOUSER ASSY GLAD IV

DATE: 1/20/03
DRAWN BY: JOHN BISHOP
APPROVED BY:
SCALE: NONE
DRW PATH: OneDrive - Strong Lighting\Drawing Vault\Drawings\7
MATERIAL: -
FINISH: -
ORIG. DRAWNING DATE -
REV.: C
CODE NO.: 7200261
SHEET: 1 of 1
DWG. NO.: 7200261

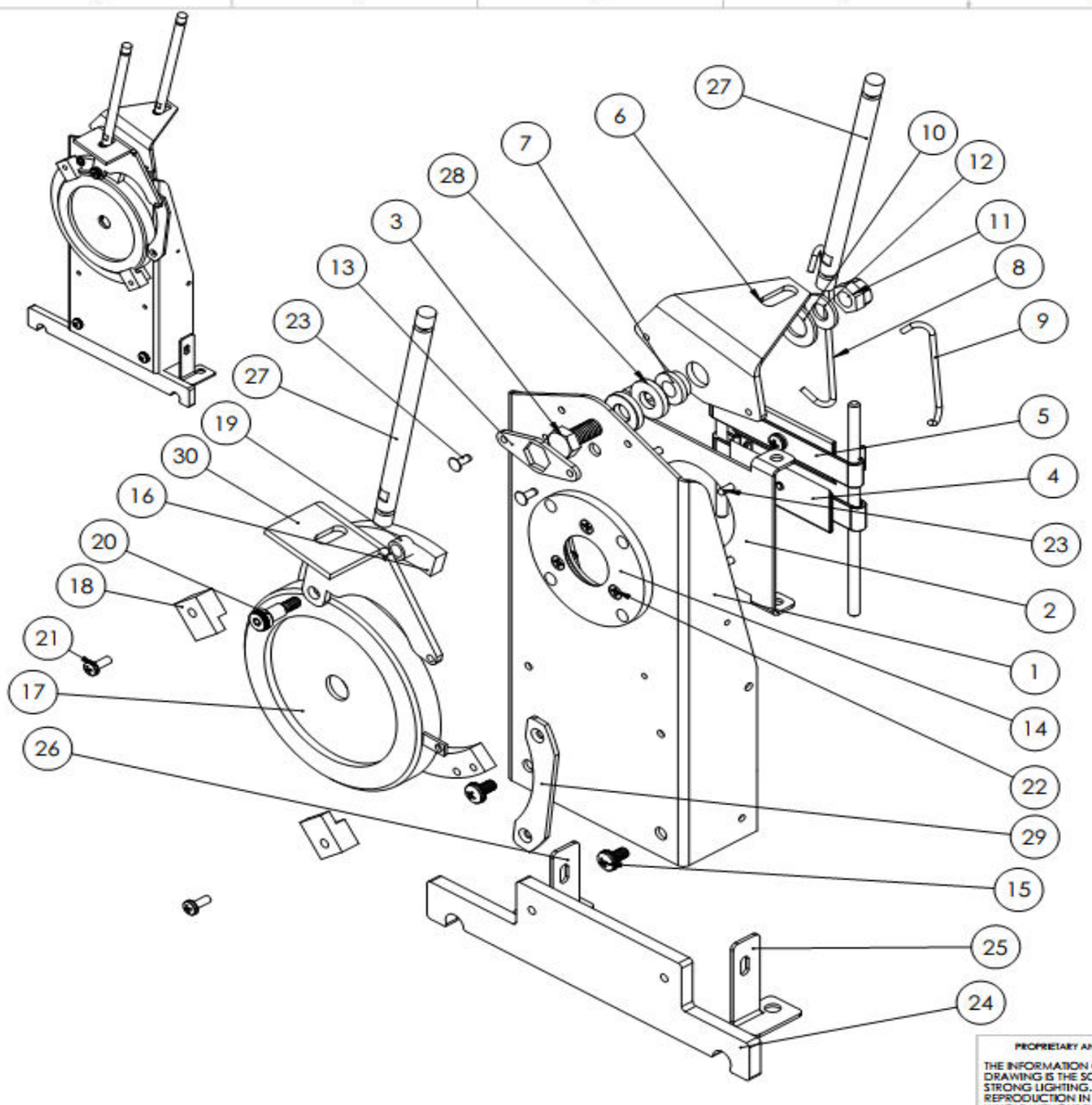

ITEM NO.	PART NUMBER	DESCRIPTION	QTY.
1	25226000	APERTURE SUPPORT	1
2	51495000	BRACKET CHOPPER	1
3	4311004	SCREW 5/16-18 x 1" HEX SS	1
4	47972000	SLIDE & MASKING BLADE - LOWER	1
5	47973000	SLIDE & MASKING BLADE - UPPER	1
6	48406000	BRACKET HANDLE CHOPPER BLADE	1
7	51153000	CHOPPER BLADE SPACER BUSHING	1
8	51497000	PULL ROD LOWER	1
9	51498000	PULL ROD UPPER	1
10	4507106	WASHER 1/2 x 7/8 OD BRONZE	1
11	4318004	NUT 5/16-18 FLEXIBLE LOCK	1
12	4317102	WASHER 5/16 x 3/4 OD SS	1
13	9700495	BRACKET, BOLT STOP	1
14	45327000	APERTURE DISK	1
15	4100371	SCREW #10-32 x 3/8 SEMS SS	2
16	24372000	ADAPTOR RING	1
17	24374000	IRIS TYPE III	1
18	25034000	IRIS CLAMP	2
19	725020	SPACER 1/4 .375 OD x .25 L SS	1
20	4151530	SCREW #10-24 x 3/4 1/4 X 3/8 SHOULDER	1
21	4060370	SCREW #6-32 x 3/8 PNHD SEMS SS	2
22	4060375	SCREW #6-32 x 3/8 PFH SS	3
23	80002	RIVET 1/8" .025-.125 GRIP AL	6
24	9700650	APERTURE IRIS MT	1
25	9700651	IRIS MT BRACKET NON-OP	1
26	9700652	IRIS MT BRACKET OP	1
27	10018	CONTROL HANDLE	2
28	4317103	WASHER 5/16, .75 OD x .125 THICK SS	2
29	9700649	BRACKET IRIS LINKAGE	1
30	9700648	BELL CRANK	1

UNLESS OTHERWISE SPECIFIED:

DIMENSIONS ARE IN INCHES

TOLERANCES:
ANGULAR: X.X = ±1.0° X.XX ± 0.5°
TWO PLACE DECIMAL ±.010
THREE PLACE DECIMAL ±.005

MATERIAL
AS BOM

FINISH

DO NOT SCALE DRAWING

	NAME	DATE
DRAWN	CIC	2/21/24
CHECKED		
ENG APPR.		
MFG APPR.		
Q.A.		

COMMENTS:
REMOVE ALL BURRS AND SHARP EDGES

STRONG LIGHTING
10533 Chandler Road, SUITE 101
La Vista, NE 68128
402-506-9096 tel, 402-256-1863 fax

TITLE: APERTURE IRIS ASSEMBLY

SIZE B | DWG. NO. 9700641 | REV

SCALE: 1:4 | SHEET 1 OF 1

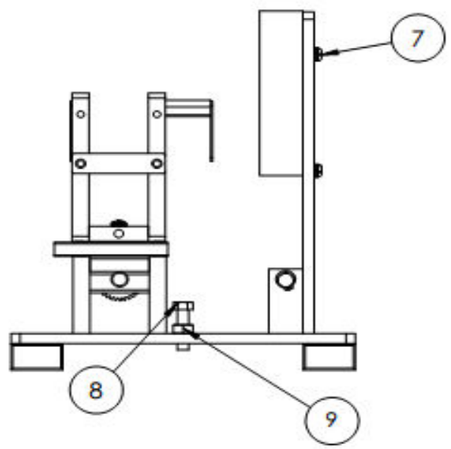

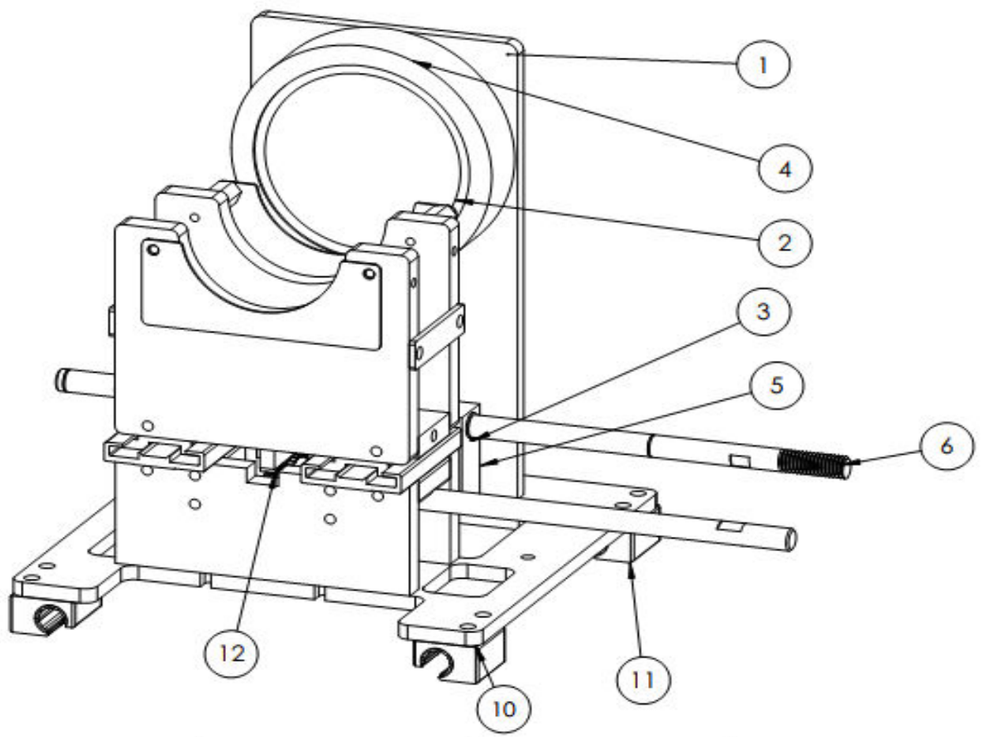

ITEM NO.	PART NUMBER	DESCRIPTION	QTY.
1	9700619	MOUNT LENS NEGATIVE	1
2	24161000	LENS FL-5"	1
3	2148011	RING SNAP EXTERNAL 3/8"	2
4	24095000	LENS NEGATIVE HOLDER	1
5	9700621	SHAFT MOUNT TROMBONE	1
6	25215000	SHAFT UNIVERSAL	1
7	4080506	SCREW #8-32 x 1/2 SEMS SS	3
8	4251001	BOLT 1/4-20 x 1" NYLON HEX	1
9	4258015	1/4-20 NYLON NUT	1
10	9700689	PLATE, BASE LENS CARRIAGE STIV	1
11	9700622	PILLOW BLOCK	4
12	9700626A	COMPOUND LENS ASSY	1

UNLESS OTHERWISE SPECIFIED:
DIMENSIONS ARE IN INCHES
TOLERANCES:
ANGULAR: X.X = ±1.0° X.XX ± 0.5°
TWO PLACE DECIMAL ±.010
THREE PLACE DECIMAL ±.005
MATERIAL
AS BOM
FINISH
DO NOT SCALE DRAWING

	NAME	DATE
DRAWN	CIC	2/20/24
CHECKED		
ENG APPR.		
MFG APPR.		
Q.A.		

COMMENTS:
REMOVE ALL BURRS AND SHARP EDGES

STRONG LIGHTING
10533 Chandler Road, SUITE 101
La Vista, NE 68128
402-506-9096 tel, 402-256-1863 fax

TITLE: LENS CARRAIGE

SIZE B | DWG. NO. 9700618 | REV

SCALE: 1:2 | SHEET 1 OF 2

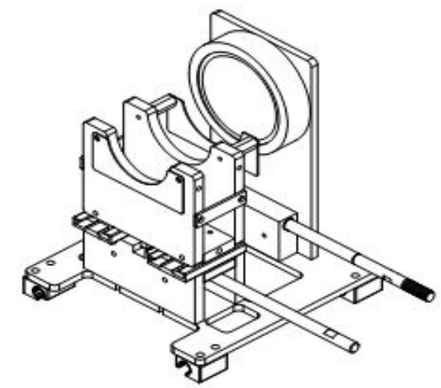

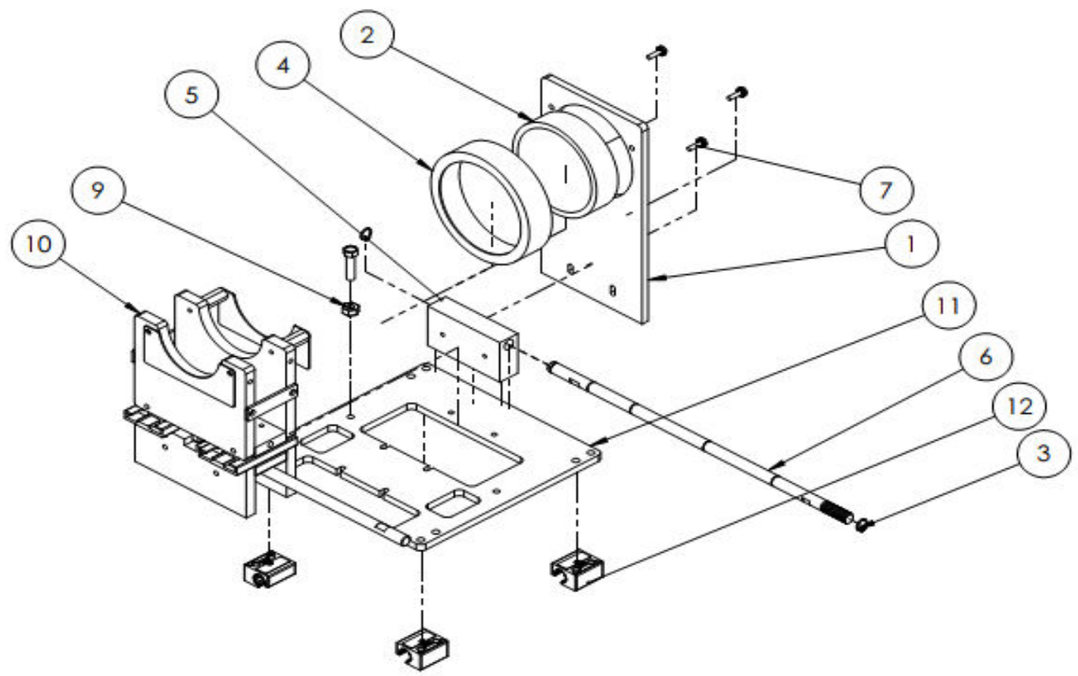

ITEM NO.	PART NUMBER	DESCRIPTION	QTY.
1	9700619	MOUNT LENS NEGATIVE	1
2	24161000	LENS FL-5"	1
3	2148011	RING SNAP EXTERNAL 3/8"	2
4	24095000	LENS NEGATIVE HOLDER	1
5	9700621	SHAFT MOUNT TROMBONE	1
6	25215000	SHAFT UNIVERSAL	1
7	4080506	SCREW #8-32 x 1/2 SEMS SS	3
8	4251001	BOLT 1/4-20 x 1" NYLON HEX	1
9	4258015	1/4-20 NYLON NUT	1
10	9700626A	COMPOUND LENS ASSY	1
11	9700689	PLATE, BASE LENS CARRIAGE STIV	1
12	9700622	PILLOW BLOCK	4

UNLESS OTHERWISE SPECIFIED:
DIMENSIONS ARE IN INCHES
TOLERANCES:
ANGULAR: X.X = ±1.0° X.XX ± 0.5°
TWO PLACE DECIMAL ±.010
THREE PLACE DECIMAL ±.005
MATERIAL
AS BOM
FINISH
DO NOT SCALE DRAWING

	NAME	DATE
DRAWN	CIC	2/20/24
CHECKED		
ENG APPR.		
MFG APPR.		
Q.A.		

COMMENTS:
REMOVE ALL BURRS AND SHARP EDGES

PROPRIETARY AND CONFIDENTIAL
THE INFORMATION CONTAINED IN THIS DRAWING IS THE SOLE PROPERTY OF STRONG LIGHTING. ANY REPRODUCTION IN PART OR AS A WHOLE WITHOUT THE WRITTEN PERMISSION OF STRONG LIGHTING IS PROHIBITED.

STRONG LIGHTING
10533 Chandler Road, SUITE 101
La Vista, NE 68128
402-506-9096 tel, 402-256-1863 fax

TITLE: LENS CARRAIGE

SIZE B | DWG. NO. 9700618 | REV
SCALE: 1:2 | SHEET 2 OF 2

REVISIONS					
REV.	DESCRIPTION	ECN #	CHNGD	DATE	APVD

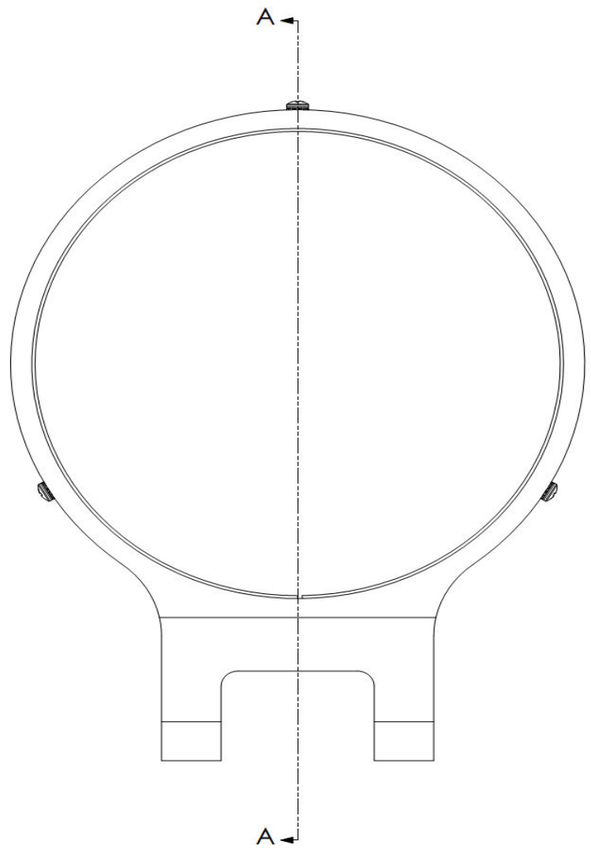

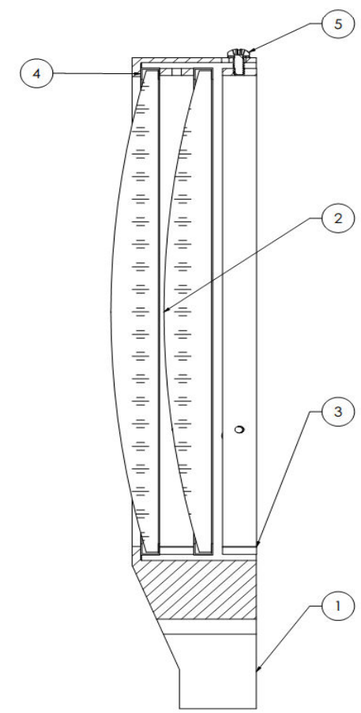

SECTION A-A

ITEM NO.	PART NUMBER	DESCRIPTION	QTY.
1	25087000	MOUNT LARGE LENS	1
2	25037000	LENS 30" FL 8" COATED	2
3	24233000	RING, LENS (.500)	2
4	24234000	GASKET, LENS	2
5	4080310	SCREW #8-32 x 5/16 SEMS SS	3

UNLESS OTHERWISE SPECIFIED
DIMS ARE IN INCHES
BREAK SHARP EDGES .010 X 45°
TOLERANCES ON ANGLE ± 1°
4 PL ±.0005, 3 PL ±.005, 2 PL ±.01
INTERPRET DIM AND TOL PER
ASME Y14.5M 1994

THIRD ANGLE PROJECTION

DO NOT SCALE DRAWING

SYMBOLS

STRAIGHTNESS
FLATNESS
PARALLELISM
PERPENDICULARITY
SYMMETRY
CONCENTRICITY

STRONG LIGHTING
10533 Chandler Road, SUITE 101 La Vista, NE 68128
402-506-9096 tel, 402-256-1863 fax

LARGE LENS ASSEMBLY

DATE: Friday, February 23, 2024 10:00:48 AM
DRAWN BY: ---
APPRVD BY: -
DWG. DATE: Tuesday, November 4, 2014 8:26:22 AM
PROJECT: 2-Ballantyne
MATERIAL: SEE BOM
REV.: -
FINISH: NONE

THIS DRAWING OR SPECIFICATION CONSTITUTES THE CONFIDENTIAL INFORMATION OF BALLANTYNE AND ITS RECEIPT OR POSSESSION DOES NOT CONVEY ANY RIGHT IN OR LICENSE TO USE IT OR THE INFORMATION DISCLOSED HEREIN NOR ANY RIGHT TO REPRODUCE THIS DRAWING OR SPECIFICATION NOR ANY PART HEREOF WITHOUT THE WRITTEN CONSENT OF BALLANTYNE

CODE NO.: 25090000
SHEET: 1 OF 2
DWG. NO.: 25090000

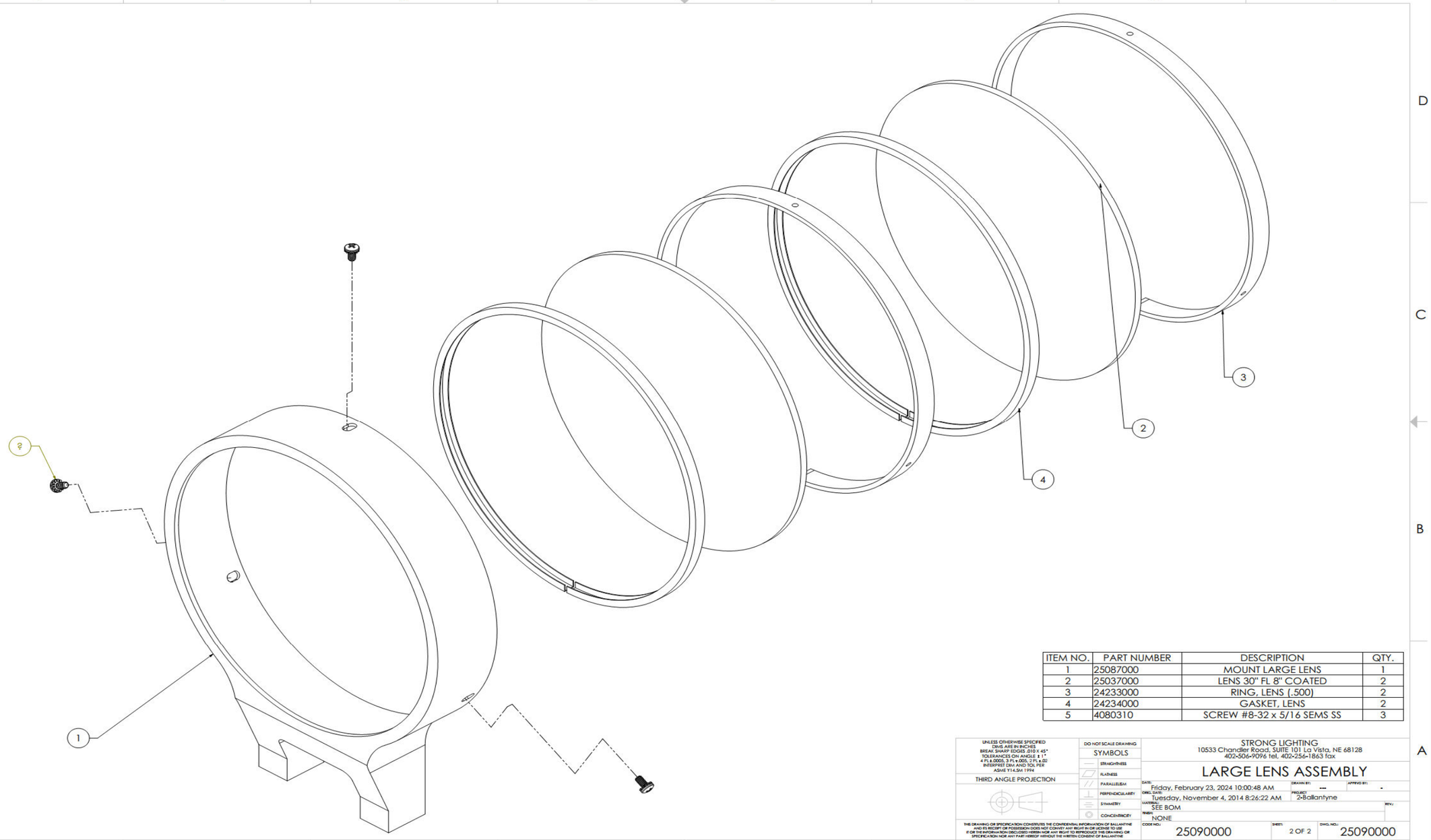

ITEM NO.	PART NUMBER	DESCRIPTION	QTY.
1	25087000	MOUNT LARGE LENS	1
2	25037000	LENS 30" FL 8" COATED	2
3	24233000	RING, LENS (.500)	2
4	24234000	GASKET, LENS	2
5	4080310	SCREW #8-32 x 5/16 SEMS SS	3

UNLESS OTHERWISE SPECIFIED
DIMS ARE IN INCHES
BREAK SHARP EDGES .010 X 45°
TOLERANCES ON ANGLE ± 1°
4 PL ±.0005, 3 PL ±.005, 2 PL ±.02
INTERPRET DIM AND TOL PER
ASME Y14.5M 1994

THIRD ANGLE PROJECTION

DO NOT SCALE DRAWING

SYMBOLS

STRAIGHTNESS
FLATNESS
PARALLELISM
PERPENDICULARITY
SYMMETRY
CONCENTRICITY

THIS DRAWING OR SPECIFICATION CONSTITUTES THE CONFIDENTIAL INFORMATION OF BALLANTYNE AND ITS RECEIPT OR POSSESSION DOES NOT CONVEY ANY RIGHT IN OR LICENSE TO USE IT OR THE INFORMATION DISCLOSED HEREIN NOR ANY RIGHT TO REPRODUCE THIS DRAWING OR SPECIFICATION NOR ANY PART HEREOF WITHOUT THE WRITTEN CONSENT OF BALLANTYNE

STRONG LIGHTING
10533 Chandler Road, SUITE 101 La Vista, NE 68128
402-506-9096 tel, 402-256-1863 fax

LARGE LENS ASSEMBLY

DATE: Friday, February 23, 2024 10:00:48 AM
DRAWN BY: ---
APPRVD BY: -
ORIG. DATE: Tuesday, November 4, 2014 8:26:22 AM
PROJECT: 2-Ballantyne
MATERIAL: SEE BOM
REV.:
FINISH: NONE
CODE NO.: 25090000
SHEET: 2 OF 2
DWG. NO.: 25090000

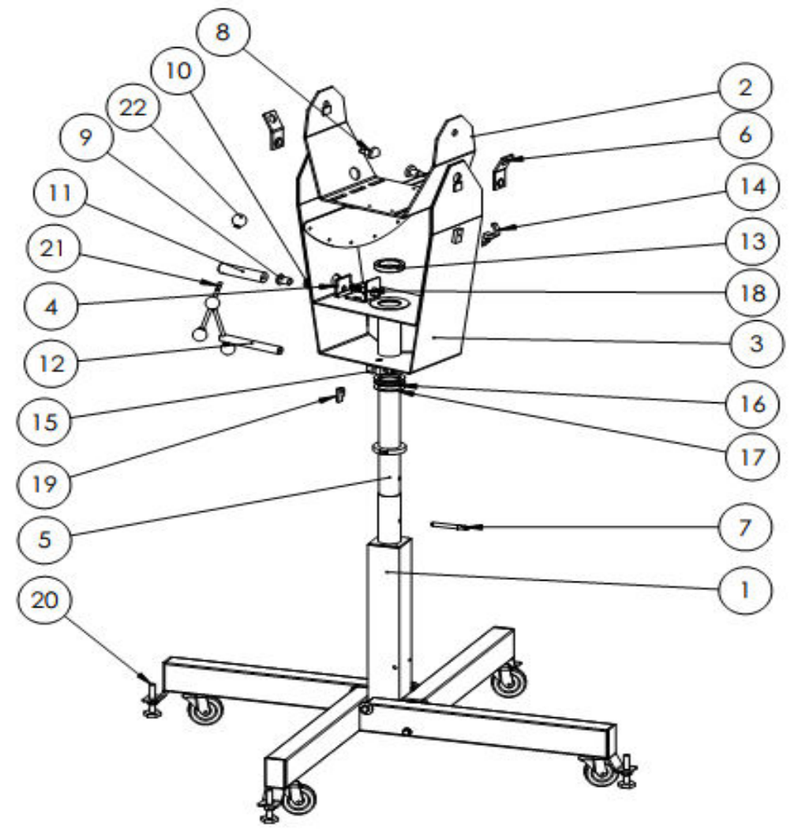

ITEM NO.	PART NUMBER	DESCRIPTION	QTY.
1	18765000	TRUSS TROUPER FOLDING STAND	1
2	25236000	YOKE LAMP QUADRANT WELD ASSEMBLY	1
3	83743000	YOKE WELDED ASSEMBLY	1
4	7201021	CLAMP PLATE WELDED STAND & YOKE	1
5	65824000	TUBE INNER WELDED ASSEMBLY	1
6	49943000	LIFTING STRAP ASSEMBLY	2
7	48395000	PIN HEIGHT ADJUST 3/8"	1
8	49120000	TILT AXIS BOLT	2
9	49124000	TRUNNION CLAMP BUSHING	1
10	49125000	CLAMP SPRING	1
11	49223000	TRUNNION CLAMP SHAFT	1
12	49290000	SWIVEL CLAMP NUT	1
13	65431000	INNER TUBE RETAINING COLLAR	1
14	83341000	CABLE CLAMP	1
15	83381000	COLLAR, SWIVEL CLAMP	1
16	83386000	THRUST BEARING	1
17	83388000	BEARING RACE	2
18	9700428	TRUNNION CLAMP ASSEMBLY - SHORT	1
19	3200612	SWIVEL STOP	1
20	49226000	LEVELING & ADJUSTER	4
21	10018	CONTROL HANDLE	2
22	10120	KNOB BALL RED	4

PROPRIETARY AND CONFIDENTIAL

THE INFORMATION CONTAINED IN THIS DRAWING IS THE SOLE PROPERTY OF STRONG LIGHTING. ANY REPRODUCTION IN PART OR AS A WHOLE WITHOUT THE WRITTEN PERMISSION OF STRONG LIGHTING IS PROHIBITED.

UNLESS OTHERWISE SPECIFIED:
DIMENSIONS ARE IN INCHES
TOLERANCES:
ANGULAR: X.X = ±1.0° X.XX ± 0.5°
TWO PLACE DECIMAL ±.010
THREE PLACE DECIMAL ±.005

MATERIAL
AS BOM

FINISH

DO NOT SCALE DRAWING

	NAME	DATE
DRAWN	CIC	2/20/24
CHECKED		
ENG APPR.		
MFG APPR.		
Q.A.		

COMMENTS:
REMOVE ALL BURRS AND SHARP EDGES

STRONG LIGHTING
10533 Chandler Road, SUITE 101
La Vista, NE 68128
402-506-9096 tel, 402-256-1863 fax

TITLE: YOKE & STAND ASSEMBLY

SIZE B | DWG. NO. 24084000 | REV

SCALE: 1:24 | SHEET 1 OF 1

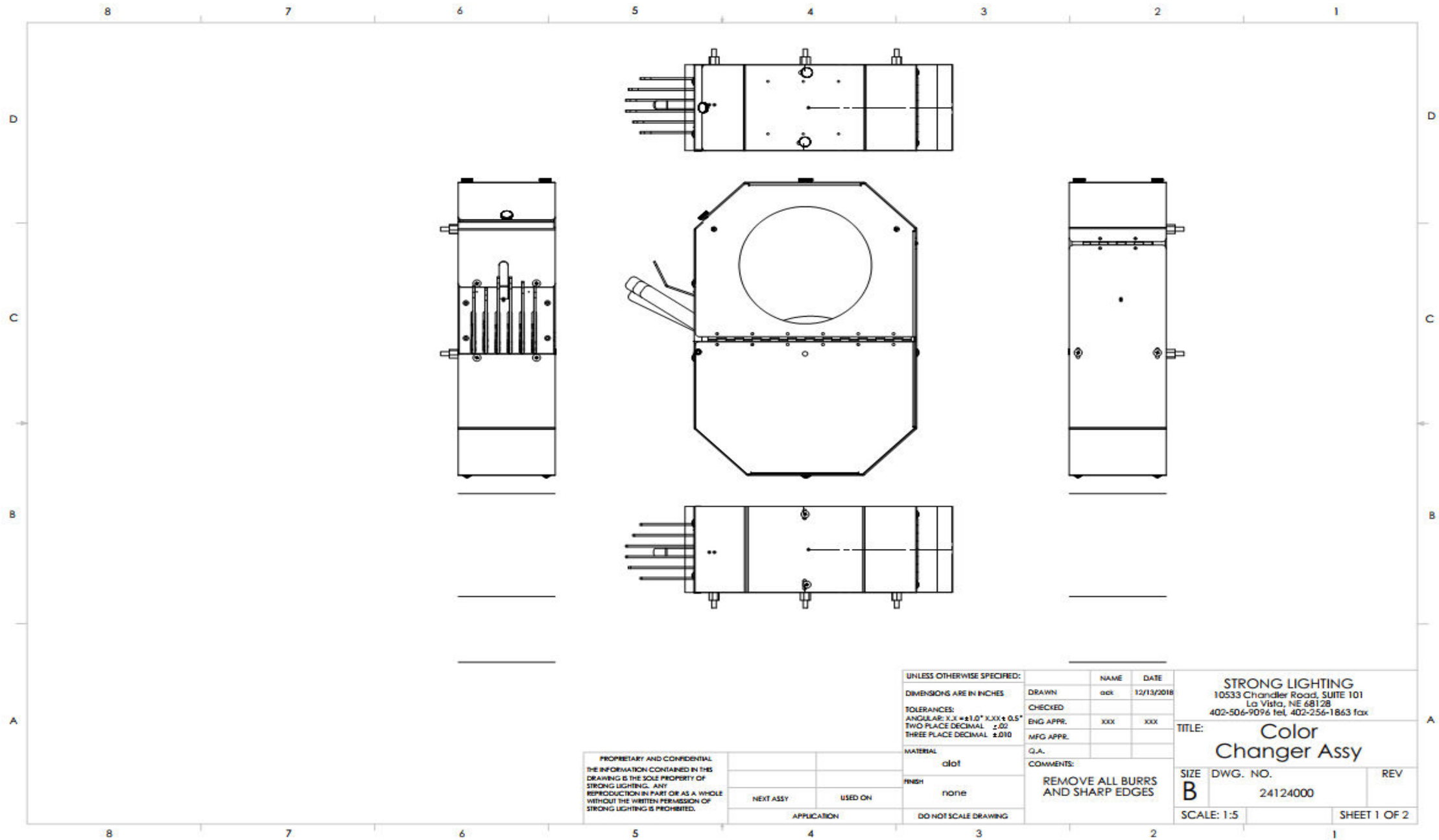
UNLESS OTHERWISE SPECIFIED:
DIMENSIONS ARE IN INCHES
TOLERANCES:
ANGULAR: X.X = ±1.0° X.XX ± 0.5°
TWO PLACE DECIMAL ±.02
THREE PLACE DECIMAL ±.010
MATERIAL
alot
FINISH
none
DO NOT SCALE DRAWING
NAME
DATE
DRAWN
ack
12/13/2018
CHECKED
ENG APPR.
XXX
XXX
MFG APPR.
Q.A.
COMMENTS:
REMOVE ALL BURRS AND SHARP EDGES
PROPRIETARY AND CONFIDENTIAL
THE INFORMATION CONTAINED IN THIS DRAWING IS THE SOLE PROPERTY OF STRONG LIGHTING. ANY REPRODUCTION IN PART OR AS A WHOLE WITHOUT THE WRITTEN PERMISSION OF STRONG LIGHTING IS PROHIBITED.
NEXT ASSY
USED ON
APPLICATION
STRONG LIGHTING
10533 Chandler Road, SUITE 101
La Vista, NE 68128
402-506-9096 tel, 402-256-1863 fax
TITLE:
Color Changer Assy
SIZE
B
DWG. NO.
24124000
REV
SCALE: 1:5
SHEET 1 OF 2

ITEM NO.	PART NUMBER	DESCRIPTION	QTY.
1	24141000	WELD PANEL ASSEMBLY OUTER	1
2	24130000	WELD ASSEMBLY FRONT PANEL	1
3	24116000	CATCH, ROCKER COLOR BOOM	1
4	24113001	MOUNT FRAME DISC COLOR	1
5	24113002	MOUNT FRAME DISC COLOR SUPPORTS	2
6	24117000	FINGER DISC RELEASE	1
7	24121000	ASSY COLOR DISC ARM 7.75	2
8	24122000	ASSY COLOR DISC ARM 8.25	2
9	24123000	ASSY COLOR DISC ARM 8.75	2
10	25159000	ASSY WELD SIDE PANEL	1
11	51396000	CATCH	6
12	51398000	SPACER COLOR CHANGER	6
13	51399000	SPACER	1
14	51526000	SHAFT, ROCKER CATCH PIVOT	1
15	51527000	SHAFT, COLOR DISC PIVOT	1
16	51556000	PAD	1
17	51928000	COLOR PLATE ASSEMBLY	6
18	51376000	COVER PLATE COLOR DISC	6
19	45209000	E-CLIP, 3/16 ROD	2
20	91199000	SNAP E-RING 5/16	2
21	625050	STANDOFF .25-20 x .50, M-F, .50 HEX	3
22	24140000	SPRING MODIFIED	2
23	51505000	ROCKER PAD - LONG	1
24	4060252	SCREW #6-32 x 1/4 PFH SS	2
25	31875000	SCREW #10-32 x 1/2 THUMB ASSEMBLY	3
26	4100501	SCREW, TRUSS-HEAD #10 x .50 SS	22
27	4107002	WASHER #10 EXTERNAL TOOTH SS	22
28	1456000	PAPR FSNR #2 RD HD X 1/2 IN	30
29	95345A601	PAN HEAD PHIL MACHINE SCREW	3
30	4257106	WSHR SEAL 1/4 NOM X 3/4 OD SS/NEOPRENE	3
31	47215000	RED COLOR DISK	1
32	47216000	DARK BLUE COLOR DISK	1
33	47217000	LIGHT BLUE COLOR DISK	1
34	47218000	TEAL COLOR DISK	1
35	47219000	PURPLE COLOR DISK	1
36	47220000	YELLOW COLOR DISK	1
37	24131000	REAR PANEL	1

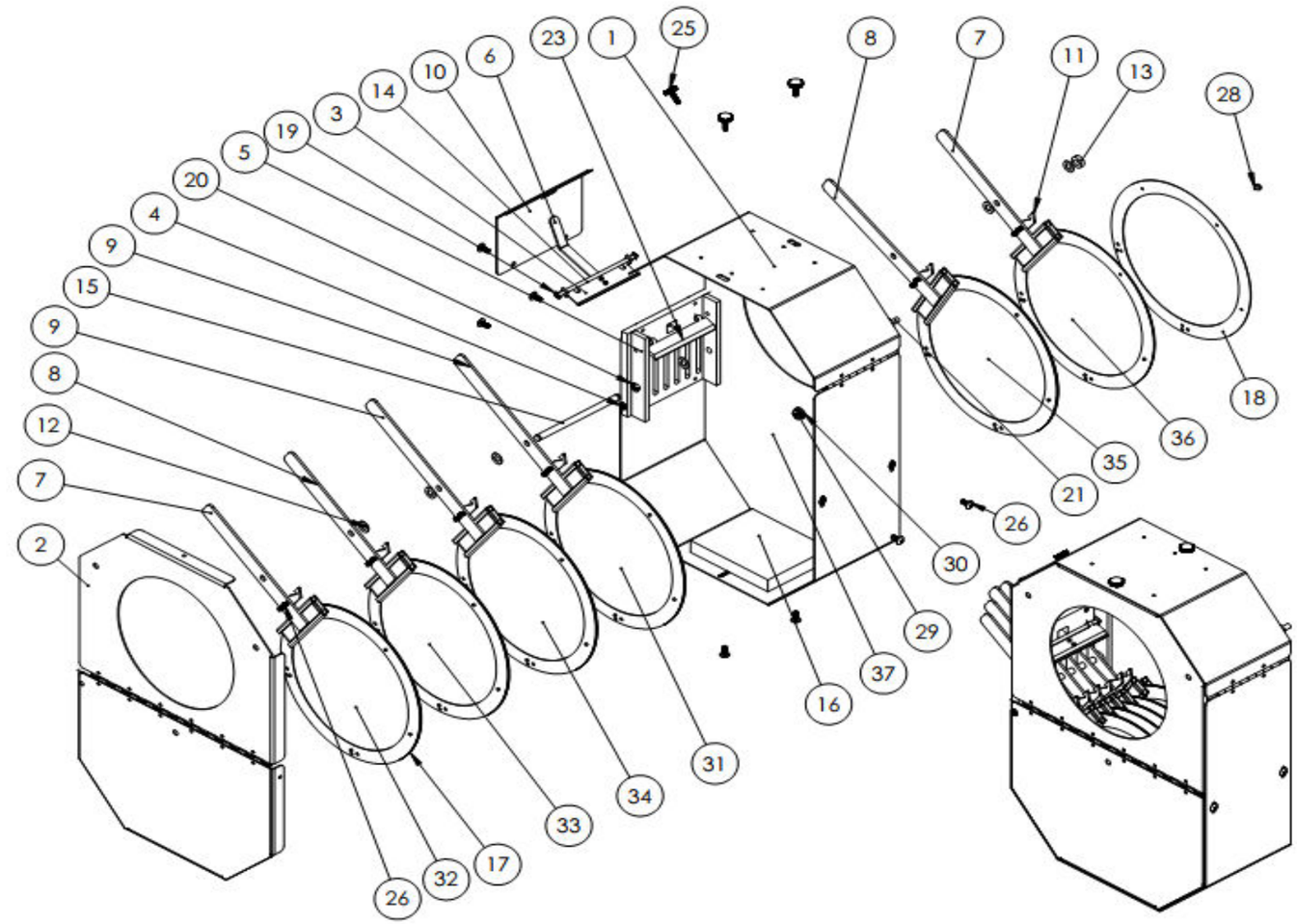

UNLESS OTHERWISE SPECIFIED:
DIMENSIONS ARE IN INCHES
TOLERANCES:
ANGULAR: X.X = ±1.0° X.XX ± 0.5°
TWO PLACE DECIMAL ±.02
THREE PLACE DECIMAL ±.010
MATERIAL: alot
FINISH: none
DO NOT SCALE DRAWING

	NAME	DATE
DRAWN	ack	12/13/2018
CHECKED		
ENG APPR.	XXX	XXX
MFG APPR.		
Q.A.		

COMMENTS: REMOVE ALL BURRS AND SHARP EDGES

NEXT ASSY | USED ON
APPLICATION

STRONG LIGHTING
10533 Chandler Road, SUITE 101
La Vista, NE 68128
402-506-9096 tel, 402-256-1863 fax

TITLE: Color Changer Assy

SIZE: B | DWG. NO. 24124000 | REV
SCALE: 1:6 | SHEET 2 OF 2

9 Schematics

This page is intentionally blank.

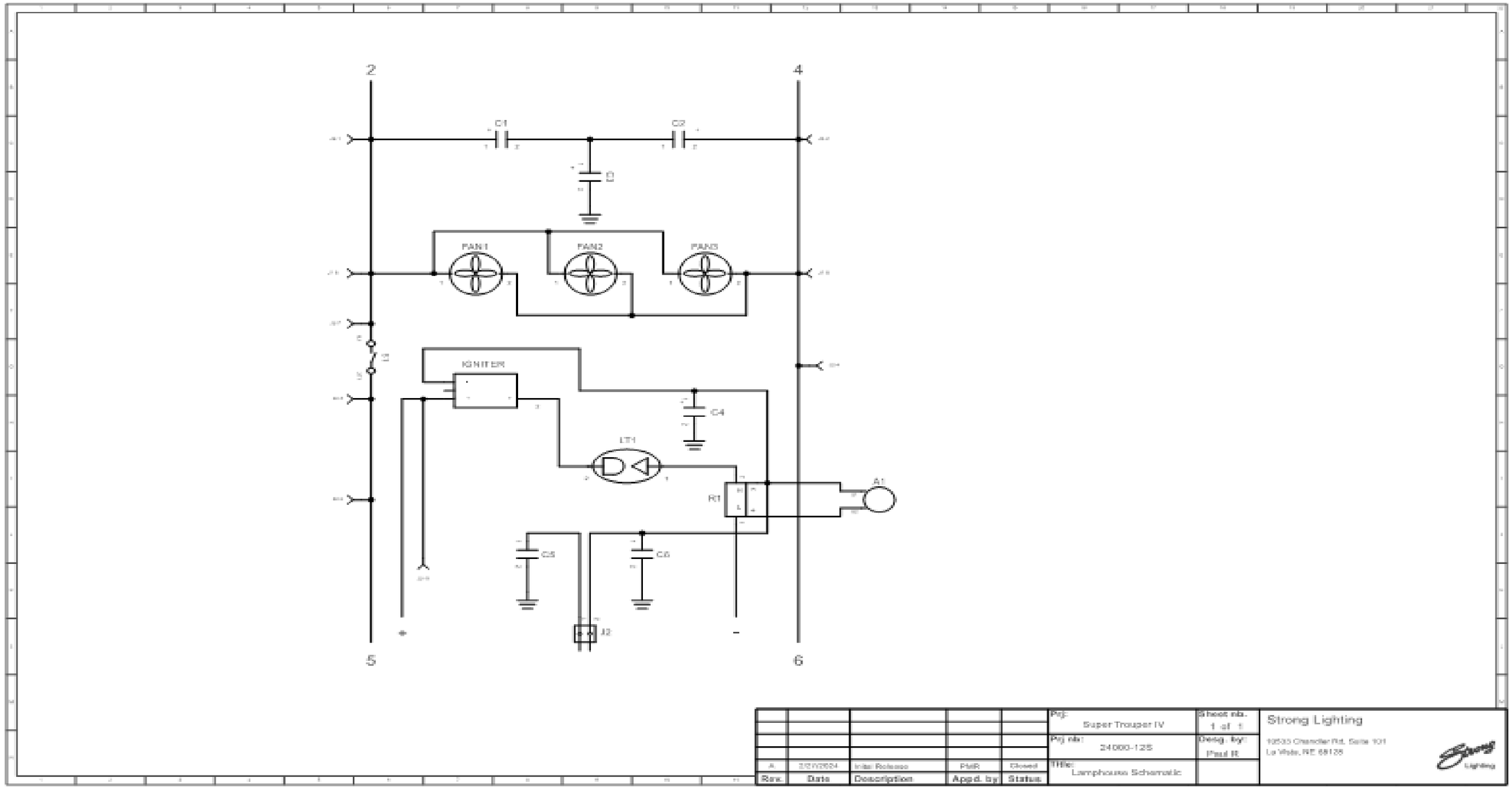
2
4
C1
C2
D
FAN1
FAN2
FAN3
F2
IGNITER
C4
LT1
R1
A1
C5
C6
J2
+
-
5
6
Proj:
Super Trouper IV
Sheet nbr.
1 of 1
Proj nbr:
24 000-125
Desig. by:
Paul R
Title:
Lamphouse Schematic
A
3/21/2024
Initial Release
PaR
Closed
Rev.
Date
Description
Appd. by
Status
Strong Lighting
10533 Chandler Rd, Suite 101
La Vista, NE 68128